STATEMENT

OF

WORK

REBUILD OF

TRANSMISSION, CLARK MODEL 13.5L MHR28890-1

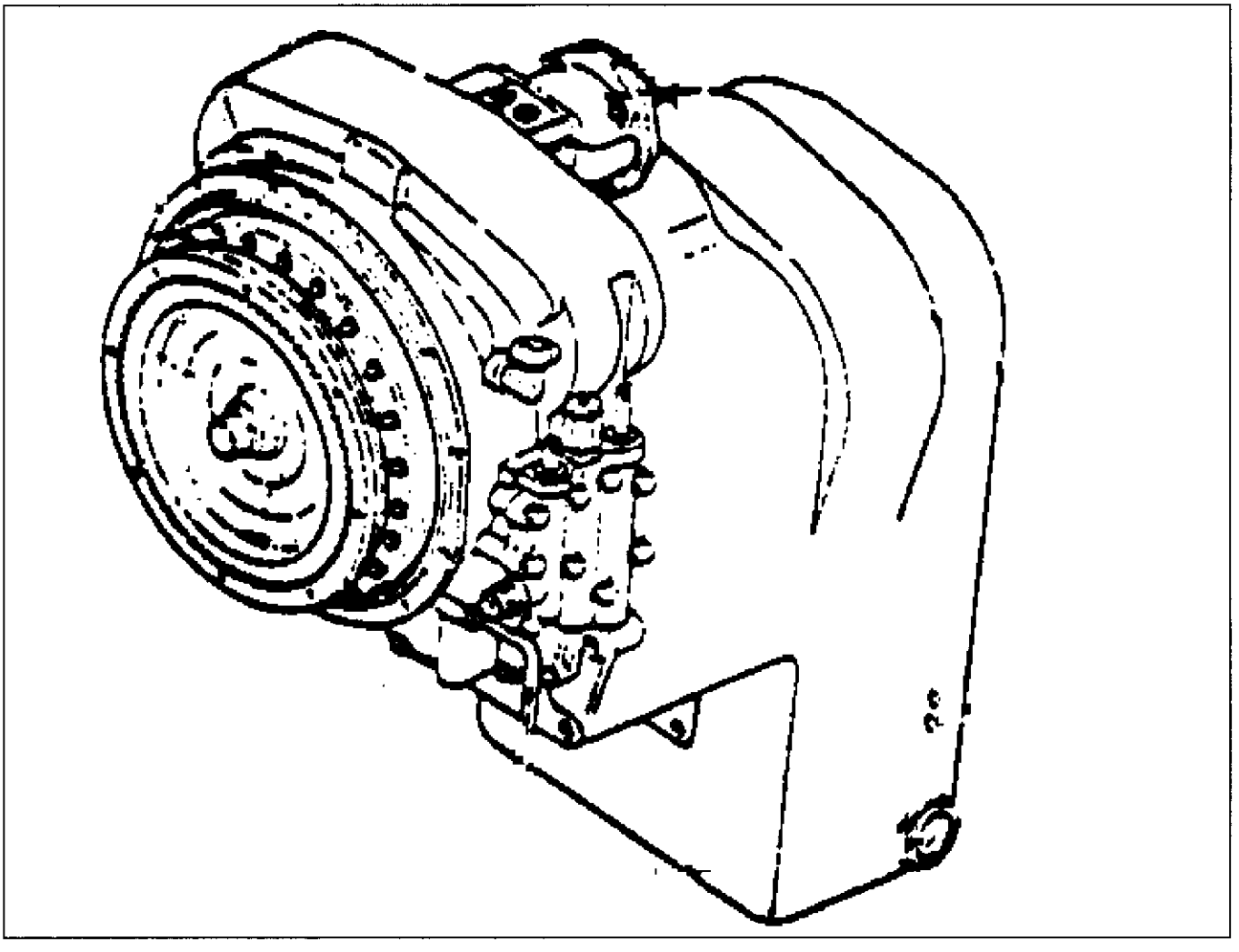

NSN 2520-01-303-9974
EFFECTIVE DATE: 25 APRIL 2003

TABLE OF CONTENTS

Section/Paragraph		Page
1.0	Scope	1
1.1	Background	1
2.0	Applicable Documents	1
2.1	Military Standards	1
2.2	Other Government Documents and Publications	1
2.3	Industry Documents	2
3.0	Requirements	2
3.1	General Tasks	2
3.2	Configuration Control	2
3.2.1	Configuration Status Accounting (CSA)	2
3.2.2	Configuration Control	3
3.3	Government Furnished Equipment(GFE)/Government Furnished Material(GFM)	3
3.4	Contractor Furnished Material (CFM)	3
3.5	Quality Assurance Provisions	3
3.6	Acceptance	4
3.6.1	Acceptance Testing	4
3.7	Rejection	5
3.8	Packaging, Handling, Storage and Transportation (PHS&T)	5

STATEMENT OF WORK FOR REBUILD OF THE TRANSMISSION, CLARK MODEL 13.5L MHR28890-1 NSN 2520-01-303-9974, ID 8D125B

1.0 SCOPE. This Statement of Work (SOW) establishes, sets forth tasks and identifies the work efforts that shall be performed by the Contractor in the rebuild effort of the Transmission, Clark Model 13.5l MHR28890-1, NSN 2520-01-303-9974 (hereafter referred to as the Clark Transmission). For purposes of this SOW, Contractor is defined as the commerical or government entity performing the rebiuld. This document contains requirements to restore the Clark Transmission to condition code "A." Condition code "A" is defined as "serviceable/ issuable without qualification, new, used, repaired or reconditioned material which is serviceable and issuable to all customers without limitation or restriction. The rebiuld of the Clark Transimmission is in support of the High Speed, High Mobility Cranes, NSN 3810-01-268-1737 and 3810-01-320-1920.

1.1 Background. Rebuild is defined as that maintenance technique to restore an item to a standard as near as possible to original or new condition in appearance, performance and life expectancy. This is accomplished through complete disassembly of the item; inspection of all parts or components, repair or replacement of worn or unserviceable parts using original manufacturing tolerances and/or specifications and subsequent reassembly of the item.

2.0 APPLICABLE DOCUMENTS. The following documents form a part of this SOW to the extent specified. Unless otherwise specified, the issues of these documents are those listed in the Department of Defense Index of Specifications and Standards (DoDISS) and supplement thereto which is in effect on the data of solicitation. In the event of conflict between the documents referenced herein and the contents of this SOW, the contents of this SOW shall be the superseding requirement.

2.1 Military Standards

MIL-STD-129	DoD Standard Practice for Military Marking
MIL-STD-2073-1D	DoD Standard Practice for Military Packaging

2.2 Other Government Documents And Publications

TM 09109A-24/2	Service Manual
SL-4-09109A	Repair Parts for Crane, Rough Terrain, Heavy, Wheel Mounted
DoD 4000.25-1-M	Military Standard Requisitioning and Issue Procedures (MILSTRIP)
TM 3080-34	Corrosion Prevention and Control

Military Handbook (Guidance Only)

MIL-HDBK-61 Configuration Management

2.3 Industry Standards

ANSI/ISO/ASQC Q9001-2000 Quality Management Systems – Requirements

Industry Standards (Guidance Only)

ASI/EIA-649 National Consensus Standard for Configuration Management

Copies of Military Standards and Specifications are available from the DOD Single Stock Point, Document Automation and Production Service, Building 4/D, 700 Robbins Avenue, Philadelphia, PA 19111-5094, commercial telephone number (215) 697-2179 or DSN 442-2179, or http://www.dodssp.daps.mil. Copies of other government documents and publications required by contractors in connection with specific SOW requirements shall be obtained through the Contracting Officer: Contracts Department (Code 891), P.O. Drawer 43019, 814 Radford Blvd., Marine Corps Logistics Bases, Albany, Georgia 31704-3019, commercial telephone number (229) 639-6761 or DSN 567- 6761. Copies of engineering drawings, if applicable, shall be obtained from Supply Chain Management Center, Attn: Code 583-1, 814 Radford Blvd. Suite 20320, Albany, GA, 31704-0320, commercial telephone number (229) 639-6476 or DSN 567-6476.

3.0 REQUIREMENTS

3.1 General Tasks. In fulfilling the specified requirements, the Contractor shall:

a. Perform a complete rebuild of the Clark Transmission in accordance with TM 09109A-24/2. Transmission repair parts list is contained in SL-4-09109A.

b. Provide materials, labor, facilities, repair parts, and missing parts necessary to inspect. diagnose, restore, and test the Clark Transmission. Upon Completion of the rebuild, the Clark Transmission shall be Condition Code "A."

c. All items shall be rust proofed as required. Rust proofing shall be in accordance with procedures for corrosion prevention and controll as identified in TM 3080-34.

3.2 Configuration Control.

3.2.1 Configuration Status Accounting (CSA)

a. The Contractor shall determine the application status of approved configuration changes by visual inspections to the extent possible. The Contractor shall use a checklist for each Clark Transmission to record the inspection findings along with other required data.

b. The Contractor shall record serial numbers of the assemblies listed on the Configuration Checklist. The Contractor shall record the information on the same form that was used to record the application status of configuration changes.

3.2.2 Configuration Control. The contractor shall apply configuration control procedures to established configuration items. The contractor shall not implement configuration changes to an item's documented performance or design characteristics without prior written authorization. If it is necessary to temporarily depart from the authorized configuration, the contractor shall prepare and submit a Request For Deviation. MIL-HDBK-61 and ANSI/EIA-649 provide guidance for preparing this configuration control document.

3.3 Government Furnished Equipment (GFE)/Government Furnished Materiel (GFM). The Management Control Activity (MCA/Code 571-1) will coordinate GFE/GFM requests and maintain a central control system on all government owned assets in the contractor's possession. The MCA will forward a GFE Accountability Agreement to the contractor for signature on an annual basis to establish a chain of custody and identify property responsibilities for Marine Corps assets. The contractor is to acknowledge receipt of GFM to the MCA within 15 days of receipt. This can be done by mailing a copy of the DD1348 to Materiel Management Department, Management Control Activity (Code 571-1), 814 Radford Blvd., STE 20320, Albany, GA 31704-0320, or faxing a copy to commercial telephone number (229) 639-5498 or DSN 567-5498.

3.4 Contractor Furnished Materiel (CFM). The contractor may requisition materiel as required in the performance of the SOW through the DoD Supply System. DoD 4000.25-1-M (MILSTRIP), Chapter 11, provides guidance to contractors on the requisitioning process. The contractor's decision to utilize CFM procured from the DoD Supply System shall be based upon cost effectiveness, availability of materiel and the required completion/delivery date.

3.5 Quality Assurance Provisions . The performances of the Contractor and the quality of work delivered, material provided and documents written shall be subject to in-process review and inspection by Marine Corps Systems Command, Code PMM 152, Albany, GA and/or their representative(s) during contract performance. Inspection may be accomplished at any work location. Authorized Marine Corps Systems Command, Code PMM 152, Albany, GA and/or their representative(s) shall be permitted to observe the work/task accomplishment or to conduct inspections within contractor normal working hours. Acceptance tests shall be held in-plant. Inspection by Marine Corps Systems Command, Code PMM 152, Albany, GA and/or their representative(s) of all acceptance tests plans, materials and associated lists furnished hereunder does not relieve the Contractor from any responsibility regarding defects or other failures to meet contract requirements which may be disclosed prior to final acceptance. The Contractor shall provide and maintain a Quality System that, as a minimum, adheres to the requirements of ANSI/ISO/ASQC Q9001-2000 Quality Management Systems – Requirements. The Contractor's

work shall be subject to in-process reviews and inspections for compliance with Quality Systems by Marine Corps Systems Command, Code PMM 152, Albany, GA and/or their representative(s). Noncompliance with procedures resulting in degraded quality of work may result in a stop-work order requiring action by the Contractor to correct the work performed and to enforce compliance with quality assurance procedures or face contract termination. Notwithstanding such Marine Corps Systems Command, Code PMM 152, Albany, GA and/or their representative(s) inspection, it shall be the Contractor's responsibility to ensure that the Transmission meets the performance requirements delineated and addressed in TM 09109A-24/2 and this SOW.

The contractor will not be subject to government oversight if the contractor has been ISO-9001 qualified or certified with a 2ND or 3RD party certification. The discovery of non-conforming product or service shall lead to government oversight until the contractor is re-qualified or re-certified by a 2ND or 3^{Rd} party auditing service.

Quality assurance operations performed by the Contractor shall be subject to the Marine Corps Systems Command, Code PMM 152, Albany, GA and/or their representative(s) verification at any time. The Marine Corps Systems Command, Code PMM 152, Albany, GA. and/or their representative(s) verifications will include the following:

a. Inspection of materials, products, assemblies, and documentation to assess compliance with quality standards.

b. Surveillance of operations to determine that quality assurance, practices, methods, and procedures are being properly applied.

c. Inspections of deliverable products to assure compliance with all requirements of TM 09109A-24/2 and this SOW.

d. Failure of the contractor facility to promptly correct deficiencies discovered shall be a reason for suspension of acceptance until corrective action has been made.

3.6 Acceptance. The performance of the Contractor and the quality of work delivered, including all equipment furnished and documentation written or compiled, shall be subject to in process review and inspection during performance. Inspection may be accomplished in plant or at any work site or location, and Marine Corps Systems Command, Code PMM 152, Albany, GA and/or their representative(s) shall be permitted to observe the work or to conduct inspection within contractor normal working hours. Final inspection and acceptance testing shall be conducted at the Contractor's facility. Final acceptance shall be conducted on 100 percent of items to verify that the units meet all requirements.

3.6.1 Acceptance Testing. Transmissions rebuilt under the provisions of this SOW shall be accomplished in accordance with TM 09109A-24/2 and this SOW.

3.7 Rejection. Failure to comply with any of the specified requirements listed herein shall be reason for rejection by the Marine Corps Systems Command, Code PMM152, Albany, GA and/or their representative(s). The Contractor shall, at no additional cost to the Marine Corps, provide the following:

a. Develop an approach for modification or correction of all deficiencies.

b. On approval of a documented approach, the Contractor shall correct the deficiencies and repeat verification until acceptable compliance with acceptance test procedures is demonstrated.

3.8 Phase IV – Packaging, Handling, Storage and Transportation (PHS&T).

a. The Contactor shall be responsible for preservation and packaging of item(s) being rebuilt under the terms of this statement of work. Items scheduled for long-term storage or shipment to overseas destinations shall bi in accordance with Level "A" requirements of MIL-STD 2073-1D, Method 54. Items scheduled for domestic shipment for immediate use, or short-term storage shall be in accordance with Level "B" requirements.

b. Marking for shipment and storage shall be in accordance with MIL-STD-129.

c. The Marine Corps will provide the contractor with shipping address(es) for delivery of repaired equipment. The Contractor shall be responsible for arranging for shipment of the equipment to the pre-designed site(s). The Marine Corps will be responsible for transportation costs associated with shipping the subject equipment to and from the contractor.

CONTRACT DATA REQUIREMENTS LIST

(1 Data Item)

Form Approved
OMB No. 0704-0188

The public reporting burden for this collection of information is estimated to average 110 hours per response, including the time for reviewing instructions, searching existing data sources, gathering and maintaining the data needed, and completing and reviewing the collection of information. Send comments regarding this burden estimate or any other aspect of this collection of information, including suggestions for reducing the burden, to Department of Defense, Washington Headquarters Services, Directorate for Information Operations and Reports (0701-0188), 1215 Jefferson Davis Highway, Suite 1204, Arlington, VA 22202-4302. Respondents should be aware that notwithstanding any other provision of law, no person shall be subject to any penalty for failing to comply with a collection of information if it does not display a currently valid OMB control number. Please DO NOT RETURN your form to the above address. Send completed form to the Government Issuing Contracting Officer for the Contract/PR No. listed in Block E.

A. CONTRACT LINE ITEM NO.	B. EXHIBIT	C. CATEGORY: TDP ____ TM ____ OTHER X
D. SYSTEM/ITEM: Transmission, Clark Model 13.5L	E. CONTRACT/PR NO.	F. CONTRACTOR

1. DATA ITEM NO.	2. TITLE OF DATA ITEM	3. SUBTITLE	17. PRICE GROUP
A001	Request For Deviation	Configuration Management	18. ESTIMATED TOTAL PRICE

4. AUTHORITY (Data Acquisition Document No.)	5. CONTRACT REFERENCE	6. REQUIRING OFFICE
DI-CMAN-80640C	SOW 3.2.2	MCLBA (583)

7. DD 250 REQ	9. DIST STATEMENT REQUIRED	10. FREQUENCY	12. DATE OF FIRST SUBMISSION
NO	A	ASREQ	See Blk 16
8. APP CODE		**11. AS OF DATE**	**13. DATE OF SUBSEQUENT SUBMISSION**
N/A			

16. REMARKS

Blk 4 - Contractor format submitted in MICROSOFT (.doc) or ADOBE (.pdf) format is authorized. Accompanying firgures or graphics shall be created using MICROSOFT (.doc) or ADOBE (.pdf) formatted software products.

Blks 10 & 12 - RFDs shall be submitted to obtain authorization to deliver nonconforming material which does not meet prescribed configuration documentation.

RFDs will be reviewed and disposition determined within 30 calendar days upon receipt by the Government.

Block 14: RFDs shall be transmitted via E-Mail to the following address: mbmatcomconfigmngmnt@matcom.usmc.mil

Distribution Statement A: Approved for Public Release; Distribution is Unlimited.

14. DISTRIBUTION

a. ADDRESSEE	b. COPIES: Draft	Final: Reg	Final: Repro
MCLBA (583-1)	0	1	0
15. TOTAL →	0	1	0

G. PREPARED BY	H. DATE	I. APPROVED BY	J. DATE
Nancy L. Bradley	APR 16 2003		22 Apr 03

DD FORM 1423-1, AUG 96 (EG) PREVIOUS EDITION MAY BE USED. Page ____ of ____ Pages

Designed using Perform Pro, WHS/DIOR, Aug 96