SOW-01-835-2-08325A-2/1

STATEMENT

OF

WORK

(SOW)

FOR IROAN OF THE

M818/M931/M931A1

5-TON TRUCKS

EFFECTIVE DATE: 10 January 2000

TABLE OF CONTENTS

	Section and Heading	Page
1.0	Scope	3
1.1	Background	3
2.0	APPLICABLE DOCUMENTS	3
2.1	Military Specifications	3
2.2	Military Standards	3
2.3	Other Government Documents and Publications	3
2.4	Industry Standards	5
3.0	REQUIREMENTS	6
3.1	General Tasks	6
3.2	Detailed Tasks	6
3.2.1	Phase I - Pre-Induction	6
3.2.2	Phase II - IROAN	7
3.2.3	Phase III - Inspection, Testing, and Acceptance	25
3.2.4	Phase IV - Packaging, Handling, Storage and Transportation	26
3.3	Configuration Control	26
3.4	Electromagnetic Environmental Effects (E3) Procedures	27
3.5	Quality Assurance Provisions	27
3.6	Government Furnished Equipment (GFE)	27
3.6.1	GFE Accountability	27
3.6.2	Government Furnished Material	27
3.7	Rejection	27
3.8	Contractor Furnished Materiel (CFM)	27
4.0	Reports	27

Appendices
A Pre-Induction Inspection Sheet
B Final Acceptance Checklist
C Dynamometer Run-In Sheet
D Hicklin Dynamometer Run Sheet
E Final Road Test Checklist

Statement of Work For the IROAN of the
M818/M931/M931A1 5-Ton Trucks
SOW-01-835-2-08325A-2/1

1.0 Scope. This Statement of Work (SOW) establishes and sets forth tasks and identifies the work efforts that shall be performed by the contractor as minimum requirements to assemble, integrate, make fully operational, calibrate, install, test, and inspect the M818/M931/M931A1 Series 5-Ton Trucks to a serviceable condition (Condition Code "A"). Condition Code "A" is defined as "Serviceable/Issuable without qualification, new, used, repaired or reconditioned materiel which is serviceable and issuable to all customers without limitation or restriction." The National Stock Numbers (NSN's) listed here are the M818 (2320-00-050-8984), M931 (2320-01-047-8753), and M931A1 (2320-01-206-4077) Series 5-Ton Trucks:

1.1 Background. Inspect Repair Only As Necessary (IROAN) is defined as "That maintenance technique which determines the minimum repairs necessary to restore equipment, components, or assemblies to prescribed maintenance serviceability standards by utilizing all available diagnostic equipment and test procedures in order to minimize disassembly and parts replacement."

2.0 APPLICABLE DOCUMENTS. The following documents form a part of this SOW to the extent specified. Unless otherwise specified, the issues of these documents are those listed in the Department of Defense Index of Specifications and Standards (DODISS) and supplement thereto which is in effect on the date of solicitation. In the event of conflict between the documents referenced herein and the contents of this SOW, the contents of this SOW shall be the superseding requirement.

2.1 Military Specifications

MIL-C-81309	Corrosion Preventive Compounds, Water Displacing, Ultra Thin Film
MIL-PRF-62218	Corrosion Preventive Compounds, Cold Application (for new and fielded motor vehicles and trailers)

2.2 MILITARY STANDARDS

MIL-STD-129	DOD Standard Practice for Military Marking

Military Standards - For Guidance Only

MIL-STD-973	Configuration Management

2.3 Other Government Documents and Publications

ATPD 2241	Vehicles, Wheeled: Preparation for Shipment and Storage of
DMWR 9-2320-260	DEPOT MAINTENANCE WORK REQUIREMENT FOR M39 AND M809 SERIES 5-TON 6X6 TRUCK.
DMWR 9-2320-272	DEPOT MAINTENANCE WORK REQUIREMENTS FOR M939 AND M939A1 SERIES 5-TON 6X6 TRUCK (DIESEL).
DMWR 9-2520-507	DEPOT MAINTENANCE WORK REQUIREMENTS FOR TRANSFER ASSEMBLY, TIMKEN MODEL T-138-10.
DMWR 9-2520-508	DEPOT MAINTENANCE WORK REQUIREMENTS FOR FLEET AND REAR AXLE ASSEMBLIES ROCKWELL INTERNATIONAL.

DMWR 9-2520-509	DEPOT MAINTENANCE WORK REQUIREMENTS FOR TRANSMISSION ASSEMBLY, SPICER MODELS 6352 AND 6453
DMWR 9-2520-522	DEPOT MAINTENANCE WORK REQUIREMENT FOR ALLISON AUTOMATIC TRANSMISSION MODEL MT654CR
DMWR 9-2520-530	DEPOT MAINTENANCE WORK REQUIREMENTS FOR TRANSFER ASSEMBLY MODEL T-1138-1
DMWR 9-2815-500	DEPOT MAINTENANCE REQUIREMENT FOR ENGINE ASSEMBLY, DIESEL NHC-250 CUMMINS.
DMWR 9-3830-501	WINCH ASSEMBLY FOR TRUCK 5-TON
DOD 4000.25-1-M	MILSTRIP Manual
TC 9-510	METAL BODY REPAIR RELATED OPN
LO 9-2320-260-12	TRUCK 5-TON M809 SERIES 6X6
LO 9-2320-272-12	TRUCK 5-TON M939 SERIES 6X6
MI-2320-25/79	INSTALLATION OF BRAKE, VALVE KIT IN THE 5-TON, M939/M939A1 SERIES TRUCKS
MI-2320-25/73	INSTALLATION OF SEAT BELTS IN THE 5-TON, M939/M939A1 SERIES TRUCKS
MI-2320-35/71	INSTALLATION OF SEAT BELTS IN THE 2 1/2 TON, M44 AND 5-TON, SERIES TRUCKS
MI-11240-24/18B	INSTL FIRE EXT BRKT TMT VEH
NAVICPINST 4491.2A	REQUISITIONING OF FURNISHED MATERIEL FROM THE FEDERAL SUPPLY SYSTEM
TB 9-2300-245-50	WHEELED TRANSPORT VEHICLES: CHASSIS DYNAMOMETER PROCEDURES AND TEST STANDARDS UNDER SIMULATED LOAD CONDITIONS
TB 9-2300-247-40	TACTICAL WHEEL VEHICLES REPAIR OF FRAMES
TB 9-2300-388-50	ACCEPTANCE TESTING OF RECONDITIONED COMBAT AND TACTICAL VEHICLES.
TM 3830-34	CORROSION PREVENTION AND CONTROL
TI-5820-25/22	Electromagnetic Environmental Effects (E3) Procedures for Installation of Communication Equipment on U.S. Marine Corps Platforms
TM 9-2320-260-10 W/CH 1-3	TRUCK 5-TON 6X6 M809 (DIESEL)
TM 9-2320-260-20	TRUCK 5-TON 6X6 M809 (DIESEL)
TM 9-2320-260-20P	TRUCK 5-TON 6X6 M809 (DIESEL)
TM 9-2320-260-34-1	TRUCK 5-TON 6X6 M809 (DIESEL)
TM 9-2320-260-34-2	TRUCK 5-TON 6X6 M809 (DIESEL)

TM 9-2320-260-34P-1	TRUCK 5-TON 6X6 M809 (DIESEL)
TM 9-2320-260-34P-2	TRUCK 5-TON 6X6 M809 (DIESEL)
TM 9-2320-272-10 W/CH1-4&A	TRUCK 5T 6X6 M939 & A1 (DIESEL)
TM 9-2320-272-20-1 W/CH1-4&A	TRK 5T 6X6 M939 SERIES (DIESEL)
TM 9-2320-272-20-2 W/CH1-4&A	TRK 5T 6X6 M939 SERIES (DIESEL)
TM 9-2320-272-20P	TRK 5T 6X6 M939 SERIES (DIESEL)
TM 9-2320-272-34-1 W/CH1-4&A	TRK 5T 6X6 M939 & M939A1 SER
TM 9-2320-272-34-2 W/CH1-4&A	TRK 5T 6X6, M939 & M939A1 SER
TM 9-2320-272-34P-1 W/CH A	TRK 5T 6X6 M939 DIESEL
TM 9-2320-272-34P-2 W/CH A	TRK 5T 6X6 M939 DIESEL
TM 9-2610-200-24	ORGANIZATIONAL DIRECT SUPPORT AND GENERAL SUPPORT MAINT, CARE, MAINT, AND REPAIR OF PNEUMATIC TIRES AND INNER TUBES
TM 9-2920-225-34	GEN ENG ASSY AC-GEN REG ASSY
TM 9-2920-225-34P	GENERATOR AC MOD AMA-5102UT/3002AC
TM 9-4910-571-12&P	SIMPLIFIED TEST EQUIPMENT FOR INTERNAL COMBUSTION ENGINES REPROGRAMMABLE (STE/ICE-R)
TM 9-6140-200-14	OPERATOR'S ORGANIZATIONAL DIRECT SUPPORT, AND GENERAL SUPPORT MAINTENANCE MANUAL FOR LEAD-ACID STORAGE BATTERIES
TM 750-254 W/CH 1-2	COOLING SYSTEMS: TACTICLA VEHICLES
TM 4750-15/1 W/CH 1-2&SUP	PAINTING REG REGISTRATION MARKINGS
TM 4750-15/2 W/CH 1-2	CAMOUFLAGE PAINT PATTERNS
8736863	Equipment Preservation Data Sheet(EPDS) (Truck,Tractor,5Ton,6X6,M818
8736990-2	Equipment Preservation Data Sheet(EPDS) (Truck,Tractor,5Ton,6X6,M931)
8750159	Equipment Preservation Data Sheet(EPDS) (Truck,Truck,5Ton,6X6,M931A1)

2.4 Industry Standards

ANSI/ISO/ASQC Q9002-1994	Quality Systems - Model for Quality Assurance in Production, Installation, and Servicing

Copies of Military Standards and Specifications are available from the DOD Single Stock Point, Defense Automation Production Service Philadelphia, Building 4D, 700 Robbins Avenue, Philadelphia, Pa.

19111-5094, Telephone (215)697-2179 or DSN 442-2179, or http://www.dodssp.daps.mil. Copies of other government documents and publications required by contractors in connection with specific SOW requirements shall be obtained through the contracting officer: Commander, Marine Corps Logistics Bases, (894) Attn: Contracting Officer, 814 Radford Blvd., Albany, Georgia 31704-1128. Copies of engineering drawings, if applicable, shall be obtained from Life Cycle Management Center, Attn: Code 825-3, 814 Radford Blvd. STE 20320, Albany, Georgia 31704-0320, commercial telephone number (912)439-6410 or DSN 567-6410.

3.0 REQUIREMENTS

3.1 General Tasks

3.1.1 In fulfilling the specified requirements, the contractor shall render, yet shall not be limited to the following tasks:

a. Provide materials, labor, facilities, repair parts and missing parts necessary to inspect, diagnose, restore, test and calibrate as required the M818/M931/M931A1 Series 5-Ton Trucks. Upon completion of IROAN, repaired vehicles shall be Condition Code "A".

b. Provide all tools and test equipment required to test, inspect, and calibrate the M818/M931/M931A1 Series 5-Ton Trucks.

c. Conduct final-on-site testing which will be witnessed by Marine Corps Logistics Base (MCLBA), Albany, Georgia (835-2) representatives.

d. Be responsible for all structural, electrical, and mechanical requirements associated with the rebuild of the repair and restoration of the M818/M931/M931A1 Series 5-Ton Trucks.

3.2 Detailed Tasks. Detailed tasks shall be as defined by the following paragraphs.

3.2.1 Phase I - PRE-INDUCTION.

a. A pre-induction inspection analysis shall be made for every vehicle to be IROANed under the provisions of this SOW using the contractor facility diagnosis, inspection, and testing techniques to determine extent of work and parts required. These findings shall be annotated on the Pre-Induction Inspection Sheet located in Appendix A.

b. Test equipment shall be used to determine that assemblies and subassemblies meet prescribed reliability, performance and work requirements. In those cases when conformance to the SOW cannot be certified through existing inspection and testing procedures and by use of diagnostic equipment, the assembly shall be removed, disassembled, inspected, tested or repaired to the degree necessary to assure full conformance with this SOW.

c. Oil seal and gasket leakage. Evidence of lubricating or hydraulic oils passing through or around a seal is in itself not a defect; however, consideration must be given to the fluid capacity in the item being checked/inspected. Inspection shall normally be performed during and immediately following an operational test, but not sufficient duration to allow the fluids to return to ambient temperature. The following shall be used as a guide in determining degree of oil loss:

(1) Class I - Seepage of fluid (as indicated by wetness or discoloration) not great enough to form drops.

(2) Class II - Leakage of fluid great enough to form drops, but not enough to cause drops to fall from the item being checked/inspected.

(3) Class III - Leakage of fluid great enough to form drops that fall from the item being checked/inspected.

NOTE

A Class I or II leak, except fuel system and brake system, is an acceptable condition at any time and does not require corrective action.

3.2.2 PHASE II - IROAN. IROAN shall be performed at the contractor's facility. Information recorded on the IROAN Pre-Induction Inspection Sheets during pre-inspection phase shall be used as a guide by the contractor to achieve the mechanical baseline of production M818/M931/M931A1 Series 5-Ton Trucks. The following efforts shall be performed as part of the IROAN:

a. Detailed Mechanical Rework - Vehicles received for IROAN shall be reworked in accordance with the following paragraphs. All discrepancies noted on the IROAN Pre-Induction Inspection Sheets shall be repaired/replaced.

b. Hardware

(1) Replace broken, unserviceable and/or missing hardware including nuts, bolts, screws, washers, turn lock fasteners, etc., in accordance with TM 9-2320-260-20P,TM 9-2320-260-34P1&2,TM 9-2320-272-20P, and TM 9-2320-272-34P1&2. Unserviceable would include any of the above that failed to function properly.

(2) Insure that proper hardware locking devices are present on all moving mechanical assemblies.

(3) Hardware normally supplied with commercial parts shall be used unless specifically prohibited.

NOTE

The requirement for separating the engine and transmission assemblies and running them on their independent dynamometers will be adhered to, unless during the pre-induction inspection, a chassis dynamometer test was performed and the engine and transmission passed performance specifications. If engine or transmission fail to meet performance specifications, then procedures will be followed as written.

c. Engine Assembly

(1) TEST PROCEDURES. After all pre-induction tests and inspections have been completed, the power pack shall be removed from the vehicle, steam cleaned, and inspected for loose or missing items. The engine assembly shall be separated from the transmission assembly. The transmission shall be processed in accordance with paragraph 3.2.2g. The engine assembly shall be attached to an engine dynamometer and the

engine run-in test shall be performed at this time. Refer to paragraph 3.2.2d for the test procedures for the fuel system which shall be tested in conjunction with the engine test. Record all results of this test on the Dynamometer Run-In Schedule, Appendix C.

(2) PASS/FAIL. After the engine run test has been finished, the completed Engine Dynamometer Run-in Schedule shall be compared with the acceptable operating specifications for the NHC 250 Cummins Engine. The engine assembly shall meet or exceed the minimum specifications to be considered as having passed. In the event the engine assembly fails to meet the specifications, further tests shall be performed in accordance with the Engine Dynamometer Run-in Schedule. Reference the IROAN Pass/Fail Logic Chart - Engine Assembly.

Change the engine oil and filter on all vehicles 100 percent.

NOTE

All fording valves shall be wired in the open position.

The above procedures for repair/replacement can be found in DMWR 9-2815-500, TM 9-2320-260-34-1, TM 9-2320-260-34P-1, TM 9-2320-272-34-1 W/CH1-4&A, and TM 9-2320-272-34P-1 W/CH A.

d. Fuel System

(1) TEST PROCEDURES. Test all fuel injectors during the dynamometer engine run-in test.

(a) Inspect the fuel pump assembly for loose or broken items and housing cracks. During the dynamometer engine run-in test, assure that the fuel pump is properly timed.

(b) Inspect the fuel primer pump for leakage.

(c) Inspect the air cleaner indicator for proper function.

(d) Inspect fuel tank and lines for rusting and leakage.

(e) Inspect ether cold starting system switch, cylinder valve, pressure switch, thermal close valve/bushing, and atomizer cylinder for proper function and cracked/leaking tubing (M939 Series only). (M809 Series only). Inspect engine cold starting switch, wiring and pre heater.

(f) Inspect accelerator pedal and linkage for binding and proper function.

(g) Inspect air cleaner assembly for corrosion, damage and leaking.

(2) PASS/FAIL. Repair/Replace injectors that do not pass the dynamometer engine run-in test.

(a) Repair/Replace any fuel pump assembly that does not pass the dynamometer engine run-in test.

(b) Replace the fuel primer pump if leaking. Assure that the pump is secure and free of leaks.

(c) Replace the air indicator if not functioning properly.

(d) Repair/Replace any fuel tank and lines that are rusting and leaking.

(e) Repair/Replace the ether cold starting system switch, cylinder valve, pressure switch, thermal close valve/ bushing, and atomizer cylinder that does not function properly. Repair/Replace any cracked/leaking tubing (M939 Series only). (M809 Series only). Repair/Replace engine cold starting system switch, wiring, and pre heater that does not function properly.

(f) Repair/Replace the throttle linkage if binding. Replace all broken or bent accelerator pedals. Replace all broken and distorted springs.

(g) Repair/Replace any hose, tube, and clamp that is leaking, damaged, or stripped.

(h) Replace all fuel filters and air filters 100 percent.

The above procedures for repair/replacement can be found in TM 9-2320-260-34-1, TM 9-2320-260-34P-1, TM 9-2320-260-10 W/CH1-3, TM 9-2320-272-34-1 W/CH1-4&A, TM 9-2320-272-34P-1 W/CH A, and TM 9-2320-272-10 W/CH1-4&A.

e. Cooling System

(1) TEST PROCEDURES. Inspect hose clamps for tightness.

(a) Inspect surge tank and cap for leaks.

(b) Inspect water manifold for leaks.

(c) Inspect thermostat housing for leaks.

(d) Inspect engine oil cooler for leaks.

(e) (M939 Series only). Inspect transmission oil cooler for leaks.

(f) Inspect fan blades for breaks, bends, and missing rivets.

(g) Inspect water pump for leaks and cracks.

(h) Inspect fan clutch for unusual noises.

(i) Inspect fan shroud for breaks or cracks.

(j) Inspect air compressor coolant lines for leaks and cracks.

(2) PASS/FAIL. Replace any hose clamp that shall not remain secure.

(a) Repair/Replace surge tank and or cap if leaking.

(b) Replace "O" rings on the water manifold if leaking.

(c) Replace thermostat and gaskets 100 percent. Replace all cracked thermostat housings.

(d) Replace the engine oil cooler element and all "O" rings and gaskets as required. Replace oil cooler housing if broken/cracked or threads are stripped.

(e) (M939 Series only). Replace transmission oil cooler assembly as required. Replace transmission oil cooler if leaking. Replace transmission oil cooler hoses and/or "O" rings if leaking.

(f) Repair/Replace the fan blade if it is broken, bent, and rivets are missing.

(g) Repair/Replace the water pump if it is leaking or the housing is cracked and unusual noises are discovered.

(h) Replace the fan clutch if unusual noises are detected.

(i) Repair/Replace the fan shroud if it is broken.

(j) Repair/replace any air compressor coolant line that is leaking or cracked.

(k) Reverse flush, clean, and inspect the radiator and heater core 100 percent (repair as required). Straighten all bent fins that can be straightened. Retest the radiator and heater core for pressurization. It shall hold 15 PSI for three minutes without evidence of leakage or structural failure. Inspect the gaskets on the left and right sides of the radiator core for leaks. Flow test the radiator and heater core by pumping water through it.

(l) Replace coolant, coolant belts, radiator, and heater hoses 100 percent. Replace antifreeze protection to a temperature of -20 degrees Fahrenheit 100 percent.

The above procedures for repair/replacement can be found in TM 9-2320-260-20, TM 9-2320-260-20P, TM 9-2320-260-34-1, TM 9-2320-260-34P-1, TM 9-2320-260-34P-2, TM 9-2320-272-20-1 W/CH1-4&A, TM 9-2320-272-20P, TM 9-2320-272-34-1 W/CH1-4&A, TM 9-2320-272-34P-1 W/CH A, TM 9-2320-272-34P-2 W/CH A, and TM 750-254 W/CH 1-2.

f. Electrical System

NOTE

All trucks for IROAN shall not have batteries installed. Install batteries before testing the electrical system.

(1) TEST PROCEDURES. Inspect all wiring harnesses, battery cables, North Atlantic Treaty Organization (NATO) slave receptacle, trailer receptacle, Simplified Test Equipment for Internal Combustion Engines Reprogrammable (STE/ICE-R) receptacle, and components for corrosion, bent or missing pins, and ripped or torn insulation and tie wraps.

(a) Test the alternator, starter, and protective control box, with the Government Furnished Equipment (GFE) STE/ICE-R test equipment.

(b) Inspect instrument panel gauges for proper operation.

(c) Inspect headlights, blackout lights, amber warning light, turn signals, rear composite lights, floodlights, side marker lights, reflectors, and instrument panel lights for cracks, corrosion, moisture, broken and blown bulbs.

(d) (M939 Series only). Inspect instrument sending units, primary and secondary low air pressure/warning alarm buzzer switch, spring brake pressure switch, front wheel drive lock-in switch, transmission neutral start switch, horn switch, horn, horn button, ether cold start switch, emergency engine stop control, hand throttle control cable, heater blower motor switch, turn signal switch, amber warning light switch, headlight switch, dimmer switch, battery switch, circuit breakers, heater blower motor, stop light switch, wiper switch, washer switch, and ignition switch for proper operation.

(e) (M809 Series only). Inspect instrument sending units, low air pressure warning alarm buzzer switch, horn switch, horn, horn button, cold starting system switch, emergency engine stop control, heater blower motor switch, hand throttle control cable, turn signal switch, amber warning light switch, headlight switch, heater blower motor, stop light switch, wiper switch, washer switch, and ignition switch for proper operation.

(2) PASS/FAIL. Repair/Replace all missing and bent pins. Repair of insulation less than four inches in length may be accomplished using electrical tape. Tears or rips in excess of four inches will require installation of new conduit. Corrosion shall be removed from components. Upon removal of corrosion, if component does not function properly, replace component. Repair/ Replace all damaged battery cables, NATO slave receptacle, trailer receptacle, and STE/ICE-R receptacle. Replace any missing or damaged tie wraps.

(a) Repair/Replace the starter, alternator, and protective control box assembly that do not pass the STE/ICE-R or other commercial tests. Install new dry batteries 100 percent.

(b) Replace any gauge or switch that does not function properly after assuring that the sending unit is not defective.

(c) Replace broken headlights, amber warning light, blackout light/lenses, turn signal light/lenses, floodlights, side marker lights/lenses, reflectors, and rear composite light/lenses. Also replace any blown bulb in the instrument panel and lighting system. Correct moisture in the lighting system by replacing the light cover gasket. Replace any light assembly that was found missing during the pre-induction of the vehicle.

(d) (M939 Series only). Replace any sending unit that does not function properly. Replace any primary and secondary low air pressure switch/warning alarm buzzer, spring brake pressure switch, front wheel drive lock-in switch, transmission neutral start switch, horn switch, horn, horn button, ether cold start switch, emergency engine stop control, hand throttle control cable, heater blower motor switch, parking brake switch, turn signal switch, amber warning light switch, headlight switch, dimmer switch, battery switch, circuit breakers, heater blower motor, stop light switch, wiper switch, washer switch, and ignition switch that does not function properly.

(e) (M809 Series only). Replace any sending unit that does not function properly. Replace low air pressure warning alarm buzzer switch, horn switch, horn, horn button, cold starting system switch, emergency engine stop control, heater blower motor switch, hand throttle control cable, turn signal switch, amber warning light switch, headlight switch, heater blower motor, stop light switch, wiper switch, washer switch, and ignition switch that does not function properly.

NOTE

Do not install or procure ether bottle for cold starting system.

The above procedures for test/repair or replacement can be found in TM 9-2320-260-20, TM 9-2320-260-20P, TM 9-2320-272-20-1 W/CH1-4&A, TM 9-2320-272-20P, TM 9-6140-200-14, TM 9-4910-571-12&P, TM 9-2920-225-34, and TM 9-2920-225-34P.

g. Transmission

(1) TEST PROCEDURES. (M939 Series only). After pre-induction tests and inspections have been completed, the power pack assembly shall be removed from the vehicle, cleaned, and inspected for loose or missing items. The transmission assembly shall be separated from the engine assembly. The transmission assembly shall be attached to a transmission dynamometer and the transmission dynamometer tests shall be performed at this time. All applicable data shall be recorded at this time. All applicable data shall be recorded on the Hicklin Dynamometer Run Sheet MT-654 Transmission, Appendix D. If the contractor facility does not have a Hicklin Dynamometer, refer to DMWR 9-2520-522 for dynamometer requirements.

(a) Inspect the transmission torque converter for proper function.

(b) Inspect the transmission selector lever assembly cable and linkage for binding and proper operation.

(2) PASS/FAIL. Upon completion of the transmission assembly dynamometer run-in test, the data recorded shall be compared with the required specifications. The transmission assembly shall meet or exceed the minimum specifications to be considered as having qualified for reinstallation in a vehicle. In the event the transmission fails the testing, it shall be repaired prior to installation in a vehicle. The transmission oil, filter, and oil pan gasket shall be replaced on all transmissions 100 percent.

(a) Repair/Replace the transmission torque converter as required to ensure proper function.

(b) Repair/Replace the transmission selector lever assembly if it does not operate smoothly. Replace all broken cables. Repair/Replace any linkage part that does not function properly.

(3) TEST PROCEDURES. (M809 Series only). After pre-induction tests and inspections have been completed, the power pack assembly shall be removed from the vehicle, cleaned and inspected for loose or missing items. The transmission assembly shall be separated from the engine assembly. The transmission assembly shall be attached to a transmission dynamometer and the transmission dynamometer tests shall be performed at this time. All applicable data will be recorded at

this time. All applicable data shall be recorded on the Hicklin Transmission Dynamometer Run Sheet. If contractor does not have a Hicklin Dynamometer, refer to DMWR 9-2520-509 for dynamometer requirements. The transmission dynamometer run sheet shall be maintained and be available to the MCLB Albany, representatives.

(a) Inspect the transmission housing for cracks, and evidence of overheating.

(b) Inspect the transmission shifter for binding and proper operation.

(4) PASS/FAIL. Upon completion of the transmission assembly dynamometer run-in test, the data recorded shall be compared with the required specifications. The transmission assembly shall meet or exceed the minimum specifications to be considered as having qualified for reinstallation in a vehicle. In the event the transmission fails the testing, it shall be repaired prior to installation in a vehicle. The transmission gear oil shall be replaced on all transmissions 100 percent.

(a) Repair/Replace the transmission housing if cracked.

(b) Repair/Replace the transmission shifter if it does not operate smoothly.

The above procedures for repair/replacement can be found in DMWR 9-2520-509, DMWR 9-2520-522, TM 9-2320-260-34-1, TM 9-2320-260-34P-1, TM 9-2320-272-34-1 W/CH1-4&A, and TM 9-2320-272-34P-1 W/CH A.

h. Transfer Case

(1) TEST PROCEDURES. Inspect transfer case for cracks, and leakage. Metal chips in the oil are not acceptable. Inspect for vibration, unusual noises and proper function in all gear positions with no indication of overheating.

(a) Inspect transfer shift lever and linkage for proper operation.

(b) Inspect transfer mounts for deterioration.

(c) Inspect transfer control valve for proper operation.

(d) Inspect the transfer output shaft for excessive up and down play.

(2) PASS/FAIL. Replace cracked housing. If the transfer shows signs of leakage, it shall be repaired. The transfer shall function properly in all gear positions with no indication of overheating. Under operating conditions, the transfer shall be free of vibration or unusual noises. Metal chips in the oil are not acceptable and evidence of same shall be cause for complete disassembly, inspection, and repair. The transfer case oil shall be replaced 100 percent.

(a) Repair/Replace the transfer shift lever and linkage if binding and not locking in all operating positions.

(b) Replace transfer mounts if deteriorated or missing.

(c) Replace transfer control valve if not operating properly.

(d) Repair/Replace transfer output shaft that has more than .013 play, measured with a dial indicator.

NOTE

Contractor shall install a tag on the steering wheel that reads, "DO NOT SHIFT TRANSMISSION INTO REVERSE WHILE TRANSFER CASE IS IN LOW RANGE." Ensure tag is water resistant.

The above procedures for repair/replacement can be found in TM 9-2320-260-34-1, TM 9-2320-260-34P-1, TM 9-2320-272-34-2 W/CH1-4&A, TM 9-2320-272-34P-1 W/CH A , DMWR 9-2520-507, DMWR 9-2520-530, LO 9-2320-260-12, and LO 9-2320-272-12.

i. Clutch Assembly (M809 Series only).

(1) TEST PROCEDURES. Inspect cover plate for rust, corrosion, nicks, burrs, and deformation. Check cover plate for collapsed, broken or cracked springs. Inspect friction plate for rust, corrosion, nicks, burrs, and deformation. No looseness allowed in rivets and linings. No distortion allowed in splines. Inspect bearing for nicks, burrs, looseness, galling, and heat discoloration.

(a) Inspect clutch lever actuating link rod assembly for binding and proper function.

(b) Inspect clutch pedal return spring for proper operation.

(c) Inspect clutch pedal free travel for proper operation.

(2) PASS/FAIL. Repair/Replace cover plate assembly to ensure proper operation. Maximum warpage allowed on cover plate surface is .004 inch. Friction plate minimum wear limit thickness is .411 inch. Replace bearing that shows evidence of overheating, galling, or looseness.

(a) Repair/Replace clutch lever actuating rod assembly if not operating properly.

(b) Replace clutch pedal return spring if defective.

(c) Adjust clutch pedal free travel as required.

The above procedures for repair/replacement can be found in TM 9-2320-260-20, TM 9-2320-260-34-2, TM 9-2320-260-34P-1, and DMWR 9-2815-500.

j. Front and Rear Axle Assemblies

(1) TEST PROCEDURES. Inspect axle assemblies for cracks and leakage. Metal chips in the oil are not acceptable.

(a) Inspect the axle differential carriers for proper operation.

(b) Inspect machine surfaces of steering knuckle joints for rust, damage, and leakage. Inspect steering knuckle boots and bearing for smooth operation and signs of leakage.

(c) Inspect axle vent valve for proper function.

(2) PASS/FAIL. Replace all cracked housings. Repair all leaks. Metal chips in the oil are not acceptable and evidence of same shall be cause for complete disassembly, inspection, and repair. The front and rear axle assemblies shall have oil replaced 100 percent.

(a) Repair/Replace an axle differential carrier that shows evidence of unusual noise, vibration or overheating.

(b) Replace bent steering knuckles and noisy bearings. Outer machined surfaces of steering knuckle joints (live front axle) shall be free of rust or other damage. All bearings shall operate smoothly. All torn boots and leaking seals shall be replaced.

(c) Replace axle vent valve if not functioning properly.

The above procedures for repair/replacement can be found in TM 9-2320-260-34-1, TM 9-2320-260-34-2, TM 9-2320-260-34P-1, TM 9-2320-272-34-2 W/CH1-4&A, TM 9-2320-272-34P-1 W/CH A, LO 9-2320-260-12, LO 9-2320-272-12, and DMWR 9-2520-508.

k. Brake System

(1) TEST PROCEDURES. (M939 Series). Inspect brake linings and brake drums for wear.

(a) Inspect all fail safe brake chambers and air brake chambers for leaks, damage, and missing cage bolts.

(b) Inspect all brake hoses for leaks.

(c) Inspect spider assembly for wear.

(d) Inspect parking/hand brake assembly for proper function.

(e) Inspect parking/hand brake lining for wear.

(f) Inspect wheel bearings and seals for galling and leaks.

(g) Inspect air reservoir tanks for leaks and rust.

(h) Inspect spring brake dash control valve, brake relay valves (front and rear), wet reservoir safety valve, air reservoir check valve, limiting valve, front axle control valve, spring parking brake valve, air bleeder valves, brake treadle valve, air governor valve, alcohol evaporator, check valves, and air compressor for leaks and proper operation.

(i) Inspect all air brake lines for cracks and leaks.

(j) Inspect front and rear glad hands for hardened, cracked, and missing grommets.

(k) Inspect front and rear glad hand ball valves for leaks and proper function.

(l) Inspect brake proportioning valve for proper operation.

(2) PASS/FAIL. (M939 Series). Repair/Replace brake linings that do not have at least 50 percent of original thickness remaining.

Replacement of brake linings shall be done on the right and left side brake assemblies. Minor heat cracks which do not extend to outer edge of drum are acceptable. Drums shall not be cracked or distorted. Concentricity of drums shall not exceed .012 inch. Maximum allowable increase in drum diameter (over original) shall not exceed 0.125 inch. Refinished drums which are machined to maximum allowable diameter are acceptable if remaining scores do not exceed 1/32 inch. Oversize drums shall be stamped on outer face of drum just above and between two studs on finished drums.

(a) Repair/Replace fail safe brake chambers and air brake chambers that are leaking or show visual damage. Replace missing cage bolts.

(b) Replace leaking or damaged brake hoses.

(c) Repair/Replace spider assemblies showing signs of abnormal wear or cracks.

(d) The parking/hand brake shall be complete with all linkage in a serviceable condition and properly adjusted.

(e) Parking/hand brake lining shall have at least 50 percent of original thickness remaining or they must be replaced. No evidence of grease or oil shall be on the parking brake lining.

(f) Replace wheel seals which show evidence of leakage. Replace wheel bearings and races which show evidence of overheating, galling, flaking, or other damage.

(g) Repair/Replace all air reservoir tanks showing evidence of leaks, cracks, or other damage. Repair/Replace air reservoir tank support brackets that are cracked, broken, or otherwise damaged.

(h) Repair/Replace the spring brake dash control valve, brake relay valves (front and rear), wet reservoir safety valve, air reservoir check valve, limiting valve, front axle control valve, spring parking brake valve, air bleeder valve, brake treadle valve, air governor valve, alcohol evaporator, check valves, and air compressor if leaking and not operating properly.

(i) Replace brake lines if cracked or leaking. Brake lines will be of current diameter and length and free of kinks or flat sections. Fitting and nut shall not be distorted to the extent that they cannot be properly tightened.

(j) Replace front and rear glad hand grommets when they are hard, cracked, or missing.

(k) Replace front and rear glad hand ball valves that are leaking and not functioning properly.

(l) Repair/Replace brake proportioning valve as required.

NOTE

Ensure new Brake Proportioning Valve Kit has been installed.

The above procedures for repair/replacement can be found in TM 9-2320-272-34-2 W/CH1-4&A, TM 9-2320-272-34P-1 W/CH A and MI-2320-25/79.

(3) TEST PROCEDURES. (M809 Series). Inspect brake linings and brake drums for wear.

(a) Inspect all brake hoses and fittings for leaks.

(b) Inspect parking/hand brake assembly for proper function.

(c) Inspect parking/hand brake lining for wear.

(d) Inspect wheel bearings and seals for galling and leaks.

(e) Inspect air reservoir tanks for leaks and rust.

(f) Inspect all air brake lines and fittings for cracks and leaks.

(g) Inspect front and rear glad hands for hardened, cracked, and missing grommets.

(h) Inspect front and rear glad hand ball valves for leaks and proper function.

(i) Remove and inspect air pack assembly, master cylinder and wheel cylinders for leaks and proper operation.

(j) Inspect brake linkage and return spring for proper operation.

(k) Inspect air compressor for leaks and proper operation.

(4) PASS/FAIL. (M809 Series). Repair/Replace brake lining that does not have at least 50 percent of original thickness remaining. Replacement of brake lining shall be done on the right and left side brake assemblies. Minor heat cracks which do not extend to outer edge of drum are acceptable. Drums shall not be cracked or distorted. Concentricity of drums shall not exceed .012 inch. Maximum allowable increase in drum diameter (over original) shall not exceed 0.125 inch. Refinished drums which are machined to maximum allowable diameter are acceptable if remaining scores do not exceed 1/32 inch. Oversize drums shall be stamped on outer face of drum, just above and between two studs on finished drums.

(a) Replace leaking or damaged brake hoses and fittings.

(b) The parking/hand brake shall be complete with all linkage in a serviceable condition and properly adjusted.

(c) Parking/hand brake lining shall have at least 50 percent of original thickness remaining or they must be replaced. No evidence of grease or oil shall be on the parking brake lining.

(d) Replace wheel seals which show evidence of leakage. Replace wheel bearings and races which show evidence of overheating, galling, flaking, or other damage.

(e) Repair/Replace all air reservoir tanks showing evidence of leaks, cracks, or other damage. Repair/Replace air reservoir tank support brackets that are cracked, broken, or otherwise damaged.

(f) Replace brake lines if cracked or leaking. Brake lines will be of current diameter and length and free of kinks or flat

sections. Fitting and nut shall not be distorted to the extent that they cannot be properly tightened.

(g) Replace front and rear glad hand grommets when they are hard, cracked, or missing.

(h) Replace front and rear glad hand ball valves that are leaking and not functioning properly.

(i) Repair/Replace air pack assembly, master cylinder and wheel cylinders if leaking and not operating properly.

(j) Repair/Replace the brake linkage and return spring if binding, broken or missing.

(k) Repair/Replace the air compressor if leaking and not operating properly.

The above procedures for repair/replacement can be found in TM 9-2320-260-20, TM 9-2320-260-34-1 and TM 9-2320-260-34P-1.

1. Tires, Wheels, Splash Guards, and Spare Tire Davit Boom Assembly

(1) TEST PROCEDURES. Inspect tire inflation. Inspect for cupping, chunking, cuts, and cracks.

(a) Inspect wheels for cracks, breaks, and damaged mounting holes.

(b) Inspect for missing, damaged, or torn splash guards.

(c) (M939 Series only) Inspect spare tire davit boom assembly for proper operation.

(2) PASS/FAIL. Each tire must have 4/32 inch or more of tread remaining and be in good serviceable condition. All tires on a vehicle shall be matched to provide proper performance and approximately equal life. Tires shall not show evidence of cupping or chunking. Tires shall not have cuts or cracks greater than one inch in length, 1/8 inch wide. Tires shall not have cuts or breaks, regardless of length or width, which extend to the fabric. Rubber separation or bulges on tire side walls are not acceptable.

NOTE

Permissible differences in outside diameter are as follows:

a. Under 30 inches, 1/4 inch

b. Thirty-forty inches inclusive, 3/8 inch

c. Over 40 inches, 1/2 inch

All tires that do not meet these requirements shall be replaced.

(a) Wheels shall be free of cracks, breaks, and damaged mounting holes. Wobble shall not exceed 1/2 inch. Above measurement is obtained by measuring the difference between high and low points on wheels adjacent to the bead on the tire while wheel is mounted on

vehicle. Front end alignment and toe-in adjustment shall meet the standards prescribed in the technical manual. All wheels that do not meet these requirements shall be replaced.

(b) Repair/Replace splash guards (front and rear) that are missing, damaged, or torn.

(c) (M939 Series only) Repair/Replace the spare tire davit boom that does not operate properly.

The above procedures for repair/replacement can be found in TM 9-2610-200-24, TM 9-2320-260-20, TM 9-2320-260-34P-1, TM 9-2320-272-20-2 W/CH1-4&A, and TM 9-2320-272-34P-1 W/CH A.

m. Steering Section

(1) TEST PROCEDURES. Inspect power steering pump, reservoir, and cap for leaks and proper function.

(a) Inspect all power steering cylinder hoses for leaks.

(b) Inspect steering gear for leaks, damage, wear, and proper function.

(c) Inspect all power steering tubing for leaks, cracks, kinks, or flat sections.

(d) Inspect upper and lower steering column assemblies for bends, breaks, cracks, and wear.

(e) Inspect pitman arm, drag link, tie rod ends, and tube for bends, breaks, cracks, deformities, and excessive play.

(f) Inspect steering wheel for cracks.

(g) Inspect for proper alignment and lubrication.

NOTE

All steering cylinders shall be removed and new seal kits and springs installed 100 per cent.

(2) PASS/FAIL. Repair/Replace the power steering pump, reservoir, and cap if leaking and not functioning properly. Replace power steering fluid 100 percent.

(a) Replace the power steering hoses if leaking.

(b) Repair/Replace the steering gear if damaged, worn, leaking, and not functioning properly.

(c) Repair/Replace the power steering tubing if cracked, kinked, leaking, or flattened.

(d) Repair/Replace the upper and lower steering column universal joints, splined couplings, and universal joint bearings that show rotary lost motion when rotated or shaken by hand.

(e) Replace drag link, pitman arm, tie rods, and tube that are bent, cracked, and deformed. The steering mechanism shall operate without binding or roughness on the drag link and steering linkage.

(f) Repair/Replace steering wheel as required.

(g) All vehicles shall be realigned and lubricated 100 percent.

NOTE

No welding or straightening (hot or cold) shall be permitted on steering gear controls. Steering wheels with minor cracks 1/8 of an inch wide or less which do not extend to the steering wheel core may be repaired by filling with a non-shrinking epoxy and sanded smooth.

The above procedures for repair/replacement can be found in TM 9-2320-260-20, TM 9-2320-260-34-2, TM 9-2320-260-34P-1, TM 9-2320-260-34P-2, TM 9-2320-272-20-2 W/CH1-4&A, TM 9-2320-272-34-2 W/CH1-4&A, TM 9-2320-272-34P-1 W/CH A, TM 9-2320-272-34P-2 W/CH A, DMWR 9-2320-260, DMWR 9-2320-272, LO 9-2320-260-12, and LO 9-2320-272-12.

n. Propeller Shafts and Suspension Section

(1) TEST PROCEDURES. Inspect all propeller shafts, universal joints, and yokes for cracks or bends.

(a) Inspect shock absorbers for leaks and bushing deterioration.

(b) Inspect springs (front and rear) for sagging.

(c) Inspect torque rods.

(2) PASS/FAIL. Repair/Replace all propeller shafts that are cracked and bent. Repair/Replace universal joint sliding couplings and universal joint bearings that show rotary lost motion when rotated or shaken by hand. Replace yokes when cracked.

(a) Replace shock absorber when they have deteriorated or are leaking. Replace bushings if deteriorated.

(b) Repair/Replace all springs that have taken a permanent set. All spring wear pads shall be removed and rotated 180 degrees. Repair/Replace any broken leaf springs.

(c) Replace torque rods if separation of rubber from metal parts exceed 3/8 inch or rubber is not resilient.

The above procedures for repair/replacement can be found in TM 9-2320-260-34-2, TM 9-2320-260-34P-1, TM 9-2320-272-20P, and TM 9-2320-272-20-1 W/CH1-4&A, and TM 9-2320-272-34P-1 W/CH A.

o. Frame Section

(1) TEST PROCEDURES. Inspect frame, side rails, engine mounts, and cross members for loose mounting and broken welds.

(2) PASS/FAIL. Repair/Replace the frame, side rails, engine mounts, and cross members that have loose mounting and broken welds.

The procedures for repair/replacement can be found in TM 9-2320-260-34-2, TM 9-2320-260-34P-1, TM 9-2320-272-34-2 W/CH1-4&A, TM 9-2320-272-34P-1 W/CH A, TB 9-2300-247-40, and DMWR 9-2320-272.

p. Exhaust and Deep Water Fording System

(1) TEST PROCEDURES. Inspect the exhaust and deep water fording system for leaks, cracks, holes, and proper operation.

(2) PASS/FAIL. Repair/Replace the exhaust and deep water fording system that has leaks, cracks, and holes (other than drain). Repair/Replace the control cable if it does not function properly.

The procedures for repair/replacement can be found in TM 9-2320-260-20, TM 9-2320-260-34-2, TM 9-2320-260-34P-1, TM 9-2320-260-34P-2, TM 9-2320-272-20-1 W/CH1-4&A, TM 9-2320-272-34-2 W/CH1-4&A, TM 9-2320-272-34P-1 W/CH A, and TM 9-2320-272-34P-2 W/CH A.

q. Front/Rear Bumpers, Cab Assembly, Glass, Windshield Wiper Assemblies, Pintles, and Towing Hooks.

(1) TEST PROCEDURES. Inspect front bumper and rear bumperettes for dents, alignment, and cracks.

(a) Inspect cab assembly, battery box, tool box, pioneer tool bracket, gas can bracket, cargo storage box, and ventilation/heater for breaks, cracks, and proper function. Doors, hood, and hardware shall function as intended. Inspect hood and cab for damage. For M939 Series only, inspect hood insulation for sagging, deterioration, missing insulation. Remove all insulation from cab/floor and inspect for corrosion.

(b) Inspect glass for breaks and cracks.

(c) Inspect windshield wiper for proper function.

(d) Inspect pintles and towing hooks for security.

(e) Inspect mirror brackets for security.

(f) Inspect seat belts for proper operation.

(g) Inspect fire extinguisher bracket for serviceability.

(2) PASS/FAIL. Repair/Replace bumpers that cannot be properly aligned. Bumpers shall be mounted securely and free of cracks. Dents not to exceed 7/16 inch are acceptable when alignments are not affected.

(a) Repair/Replace cab assembly that has cracks, breaks, corrosion, and missing/damaged hardware. Repair/Replace the tool box, pioneer tool bracket, gas can bracket, and cargo storage box that has cracks, rust, breaks, and missing/damaged hardware. Dents, sags and bulges in the floor that do not exceed 7/16 inch are acceptable. Doors, hood, closures, and associated hardware shall function as intended. Indentations of no more than 1/2 inch are acceptable. The battery box shall be free of corrosion and acid deposits. Repair/Replace any ventilation/heater control cables, hoses, screens, and doors that are ripped, torn, and are not functioning properly. Repair/Replace the hood. For M939 Series only, repair/replace the hood insulation if damaged, sagging, deteriorated, or missing and replace cab/floor insulation 100 percent.

(b) Repair/Replace door and windshield glass that are cracked. Minor discoloration not more than 1-1/2 inches from the edge

and on the right side of the windshield is acceptable. Scattered hairline scratches not within the driver's immediate vision are acceptable. Mounting and frames shall be secure. Seals shall be weather tight when this is the intended function. Slight weather checking on rubber seals is acceptable.

(c) Repair/Replace wiper motor that do not function properly. Replace wiper hoses that leak (minor weather checking is acceptable).

(d) Repair/Replace pintles and towing hooks that are not properly secured to vehicle. Securing cotter pin shall be attached and fastened properly. Towing hook shall be properly mounted. Pintles shall be lubricated and operate freely. End play in excess of 1/4 inch is not acceptable. Wear on pintle shaft or bushing, or both, to the extent of 1/8 inch is acceptable.

(e) Mounting shall be secure. Adjustment features shall function properly.

(f) Replace seat belts if they do not function properly.
(g) Replace fire extinguisher bracket if missing.

Note

If seat belts or fire extinguisher bracket are missing, install at this time.

The procedures for repair/replacement can be found in LO 9-2320-260-12, MI-2320-25/73, MI-2320-35/71, MI-11240-24/18B, TM 9-2320-260-20, TM 9-2320-260-34-2, TM 9-2320-260-34P-1, TM 9-2320-260-34P-2, LO 9-2320-272-12, TM 9-2320-272-20-2 W/CH1-4&A, TM 9-2320-272-34-2 W/CH1-4&A, TM 9-2320-272-34P-1 W/CH A, and TM 9-2320-272-34P-2 W/CH A.

r. Backs/Frames

(1) TEST PROCEDURES. Inspect back/frames/and tracks for damage, sagging, broken springs, deteriorated frames and proper function.

(2) PASS/FAIL. Repair/Replace seat/backs/frames/and tracks that have damaged, sagging, broken springs, deteriorated frames, and tracks that do not operate properly.

The above procedures for repair/replacement can be found in TM 9-2320-260-20, TM 9-2320-260-34-2, TM 9-2320-260-34P-1, TM 9-2320-272-20-2 W/CH1-4&A, and TM 9-2320-272-34P-1 W/CH A.

s. Fifth Wheel Assembly

(1) TEST PROCEDURES. Inspect fifth wheel assembly for cracks, damaged bearings, and wear. Inspect for missing or damaged mounting plate, spacer plates and approach plates.

(2) PASS/FAIL. Must couple and uncouple satisfactorily. Shall be free of excessive wear in bushings and evidence no damage to parts and components. Total accumulative wear between pin and bushing is not to exceed 1/8 inch. Repair/Replace mounting plate, spacer plates and approach plates that are missing or damaged.

(a) Repair/Replace dump roller arm assembly as required to ensure proper function.

(b) Repair/Replace dump safety braces as required.

(f) Repair/Replace tailgate control assembly showing signs of *abnormal wear, bends, or broken/missing components.*

The above procedures for repair/replacement can be found in LO 9-2320-260-12, TM 9-2320-260-10 W/CH1-3, TM 9-2320-260-20, TM 9-2320-260-20P, TM 9-2320-260-34-2, TM 9-2320-260-34P-1, LO 9-2320-272-12, TM 9-2320-272-10 W/CH1-4&A, TM 9-2320-272-20-2 W/CH1-4&A, TM 9-2320-272-20P TM 9-2320-272-34-2 W/CH1-4&A, TM 9-2320-272-34P-1 W/CH A, DMWR 9-2320-260, and DMWR 9-2320-272.

t. Rustproofing and Painting (Exterior/Interior)

(1) TEST PROCEDURES. Inspect vehicle for body damage, cleanliness, and rust.

NOTE

Rustproofing does not apply to processing of fuel tanks, radiator, engine, transmission, vehicle suspension, transfer, and axles.

(2) PASS/FAIL. Repair all body and rust damage before rustproofing vehicle. All vehicles shall be rustproofed 100 percent. The contractor shall undercoat the unexposed (undersite) and shaded area (i.e. under fenders) of the vehicles/equipment inducted for either rebuild or IROAN in the following manner:

a. Clean area with either steam or high pressure water to remove dirt and loosen corrosion.

b. Treat affected (corroded) area(s) with phosphoric fog.

c. Reclean.

d. Apply MIL-C-81309 Type I, a water displacing corrosion inhibitor, to the affected area(s).

e. Apply MIL-PRF-62218 Type II (Approved undercoating). Firewalls may be similarly treated to a minimum thickness of 3.5 mils. However, do not apply undercoating to components located on firewalls which are subject to heat transfer or are normally not painted.

Treat stages I through IV corrosion in isolated and hard to reach areas not normally undercoated in the following manner:

a. Clean area with either steam or high pressure water to remove dirt and loosen corrosion.

b. Brush a phosphoric acid solution on the affected areas. Remove corrosion manually, as required.

c. Reclean.

d. Prime and paint per latest edition of TM 4750-15/1 W/CH 1-2&SUP.

All vehicles require repainting and shall be painted with CARC paint and have 3-CCP applied. The painting of tires is not authorized. The removal

of paint over spray from tires received for IROAN is not required. Precautions shall be taken to prevent further paint over spray on tires.

The above procedures can be found in TC-9-510, TM 3830-34, TM 4750-15/1 W/CH 1-2&SUP, and TM 4750-15/2 W/CH 1-2.

u. Hydraulic System

(1) TEST PROCEDURES. Inspect hydraulic pumps, motors, power Take-off, drum, rollers, reservoir, lines, winch control valve, hoses, and fittings for damage, rust, and leakage.

(a) Inspect the winch control and transmission power take-off control levers, cables, and linkage for proper operation.

(b) Inspect winch for evidence of leaks or misadjustments. Operate winch under load to insure proper operation.

(2) PASS/FAIL. Repair/Replace the hydraulic pumps, motors, power take-off, drum, rollers, reservoir, lines, winch control valve, hoses, and fittings that are damaged, rusted, or leaking.

(a)Repair/Replace the hydraulic pumps, motors, reservoir,lines, winch control valve, hoses, and fittings that are damaged, rusted, or leaking.

(b) Repair/Replace winch that is leaking or out of adjustment to ensure proper function.

NOTE

75 percent of cable length shall be inspected.

Replace the hydraulic fluid and filters 100 percent, all vehicles.

The procedures for repair/replacement can be found in DMWR 9-3830-501, LO 9-2320-260-12, TM 9-2320-260-10 W/CH1-3, TM 9-2320-260-20, TM 9-2320-260-34-2, TM 9-2320-260-34P-2, LO 9-2320-272-12, TM 9-2320-272-10 W/CH 1-4&A, TM 9-2320-272-20-2 W/CH1-4&A, TM 9-2320-272-34-2 W/CH1-4&A, TM 9-2320-272-34P-1 W/CH A, and TM 9-2320-272-34P-2 W/CH A.

v. Winch Controls. (M809 Series Only)

(1) TEST PROCEDURES. Inspect the winch control/transmission power take-off control lever and linkage for proper operation.

Inspect drum and rollers for nicks, burrs, rust and deformation.

(2) PASS/FAIL. Repair/Replace the winch control/transmission power take-off control lever that is damaged, corroded or missing.

Repair/Replace drum and rollers that have nicks, burrs, rust and deformation.

The procedures for repair/replacement can be found in LO 9-2320-260-12, TM 9-2320-260-10 W/CH1-3, TM 9-2320-260-34-2, TM 9-2320-260-34P-1, TM 9-2320-260-34P-2, and DMWR 9-3830-501.

w. Data Plates and Decals

(1) TEST PROCEDURES. Inspect vehicle for missing, damaged, and illegible data plates and decals.

(2) PASS/FAIL. Replace all data plates and decals that are missing and illegible. IROAN data plates shall be prepared by the DMA or contractor and contain the following information:

VEHICLE SERIAL NO. _____ REPAIRED IN ACCORDANCE WITH 5-TON IROAN STANDARDS.

_____ _____
CONTRACTOR DATE

_____
ODOMETER READING AT TIME OF IROAN

NOTE

Odometers and hour meters on vehicles IROANed under provisions of this IROAN SOW shall not be turned back to zero.

Position IROAN Data Plate on the right hand side of dash (below the grab handle and attach with rivets).

The above procedures for repair/replacement can be found in TM 9-2320-260-10 W/CH1-3, TM 9-2320-260-34P-1, TM 9-2320-260-34P-2, TM 9-2320-272-10 W/CH 1-4&A, TM 9-2320-272-34P-1 W/CH A and TM 9-2320-272-34P-2 W/CH A.

3.2.3 Phase III Inspection, Testing, and Acceptance

a. Inspection, testing, and acceptance of the vehicle shall be conducted in accordance with the Final Road Test Check List, Appendix E, and the Final Acceptance Checklist, Appendix B. These completed checklists shall be provided to the government.

b. The contractor shall be responsible for conducting all required tests. The contractor shall ascertain that all necessary personnel are available, the Final Road Test Check List has been distributed, and that the test area has been cleared of all equipment parts, components, etc., not required for the test.

c. Acceptance Testing. Vehicles IROANed under the provisions of this SOW shall be accomplished in accordance with TB 9-2300-388-50 (Acceptance Testing of Reconditioned Combat and Tactical Vehicles). Chassis dynamometer procedures and test standards outlined in TB 9-2300-245-50 (Wheeled Transport Vehicles: Chassis Dynamometer Procedures and Test Standards Under Simulated Load Conditions).

d. The contractor shall be responsible for correcting any deficiencies identified during testing. The MCLB Albany, representatives may require the contractor to repeat tests, or portions thereof, if the original tests fail to demonstrate compliance with the 5-Ton Series SOW.

e. Observation of fluid leaks under a vehicle while performing a walk around inspection immediately after road test does not make the equipment defective. This leakage is an indication that further investigation is required to determine location and cause. The important thing to remember is the fluid capacity when the criticality of the component is questioned. If the inspector is in doubt, he should request assistance from his immediate supervisor.

f. When equipment is standing idle (not energized) and the component is at ambient temperature, any drop that falls, oil or hydraulic fluid, shall be classified as a major defect.

3.2.4 Phase IV Packaging, Handling,Storage and Transportation (PHS&T)

a. The contractor shall be responsible for preservation and packaging of the items being repaired under the terms of this statement of work. Items being prepared for long term storage shall be in accordance with the level A requirements of ATPD 2241 and the applicable EPDS,i.e., 8736863 for M818, 8736990-2 for M931, 8750159 for M931A1. EPDSs may be obtained from Materiel Management Division, Logistics Support Section (822-1), Suite 20320, 814 Radford Blvd., Albany, Ga. 31704-0320, Commerical telephone (912)439-6786 or DSN 567-6786. Items scheduled for domestic shipment, immediate use or overseas shipment with the exception of Maritime Prepositioned Forces (MPF), shall be level "B", Drive-On/Drive Off. Items prepared for level "B", Drive-On/Drive-Off scheduled for overseas shipment shall have a label affixed which reads, "NOT FOR WEATHER DECK STOWAGE." Items scheduled for MPF shall be prepared to level B, MPF Modified Drive-Away.

b. The terms "Drive-on/Drive-off" and "MPF Modified Drive Away" are defined as follows:

(1) DriveOn/Drive-Off - Batteries shall be hot and disconnected from vehicle electrical system. Terminals and leads shall be taped. Fuel tank shall be filled 1/4 tank full. The air intake system, exhaust and brake systems, drive-train and gauges shall be depreserved.

(2) MPF Modified Drive Away - Batteries shall be hot and connected to vehicle electrical system. Fuel tank shall be filled 3/4 full of JP5. The air intake system, exhaust and brake systems, drive-train and gauges shall be depreserved. Fire extinguisher bracket and seat shall be installed.

c. Marking shall be in accordance with MIL-STD-129.

d. The Marine Corps will provide the contractor with the shipping address(es) for delivery of the repaired equipment. The contractor shall be responsible for arranging for shipment to the pre-designated site(s). The Marine Corps will be responsible for transportation costs associated with shipping the subject equipment to and from the contractor.

3.3 Configuration Control. The contractor shall apply configuration control procedures to established configuration items. The contractor shall not implement configuration changes to an item's documented performance or design characteristics without receiving prior written authorization.The baseline configuration has been defined by the written procedures or material contained in manuals, standards, instructions or engineering drawings. If it is necessary to depart from the authorized configuration baseline, the contractor shall submit a Request for Deviation or Request for Waiver using MIL-STD-973, (paragraph 5.4.3 or 5.4.4, and Appendix E) as guidance.

3.4 Electromagnetic Environmental Effects (E3) Procedures. The contractor shall plan for and execute proper E3 control procedures when applicable in the IROAN process and shall use TI-5820-25/22 in conjunction with the detailed requirements specified in this SOW.

3.5 QUALITY ASSURANCE PROVISIONS. The Contractor shall provide and maintain a Quality System that as a minimum, adheres to the requirements of ANSI/ISO/ASQC Q9002-1994, Quality System Model for Quality Assurance in Production, Installation, and Servicing. The performance of the contractor

and the quality of work delivered, material provided and documents written shall be subject to in-process review and inspection by the MCLB Albany, representatives during contract performance. Inspection may be accomplished at any work location. Authorized MCLB Albany, representatives shall be permitted to observe the work/task accomplishment or to conduct inspections at all reasonable hours. Acceptance Tests shall be held in-plant. Inspection by the MCLB Albany, representatives of all acceptance test plans and materials and associated lists furnished hereunder does not relieve the contractor from any responsibility regarding defects or other failures to meet contract requirements which may be disclosed prior to final acceptance. Failure of the contractor to promptly correct deficiencies discovered shall be reason for suspension of acceptance until corrective action has been accomplished.

The contractor shall have in place documented procedures and standards for quality assurance and the contractor's work shall be subject to in-process reviews and inspections for compliance with these procedures and standards by MCLB Albany, representatives. Noncompliance with procedures resulting in degraded quality of work may result in a stop-work order requiring action by the contractor to correct the work performed and to enforce compliance with quality assurance procedures or face contract termination. Notwithstanding such MCLB Albany, representative inspection, it shall be the contractor's responsibility to ensure that the entire system meets the performance requirements delineated and addressed in the 5-Ton SOW.

3.6 Government Furnished Equipment (GFE). MCLB Albany, will provide the following as GFE: Simplified Test Equipment for Internal Combustion Engines Reprogrammable (STE/ICE-R), NSN 4910-01-222-6589, 1 each.

3.6.1 GFE Accountability. The Management Control Activity (MCA), Marine Corps Logistics Bases, Albany, Georgia (MCA/Code 827-2) will coordinate assets in contractor's possession. The MCA will forward a GFE Accountability Agreement to the contractor for signature to establish a chain of custody and property responsibilities for Marine Corps assets.

3.6.2 Government Furnished Materiel (GFM). None.

3.7 Rejection

3.7.1 Failure to comply with any of the specified requirements listed herein shall be reason for rejection by the MCLB Albany, representatives. The contractor shall, at no additional cost to MCLB Albany, provide the following:

a. Develop an approach for modification or correction of all deficiencies.

b. Upon approval of a documented approach, the contractor shall correct the deficiencies and repeat the verification until an acceptable compliance with acceptance test procedures requirements is demonstrated.

3.8 Contractor Furnished Materiel (CFM). The Marine Corps has adopted the Navy's procedures regarding Contractor Furnished Materiel (NAVICPINST 4491-2A). In the event Contractor Furnished Materiel (CFM) is required for repair parts, the contractor shall requisition through the DoD Supply System. DOD 4000.25-1-M, (MILSTRIP) Chapter 11, authorizes contractors to requisition through the DoD Supply System.

4.0 REPORTS

4.1 The contractor shall provide Monthly Progress Reports summarizing the progress and status of the IROAN Program.

4.2 The contractor shall provide a Repairable Item Inspection Report for each 5-Ton IROANed.

APPENDIX A

IROAN
PRE-INDUCTION INSPECTION SHEETS
FOR
5 TON FAMILY VEHICLES

DATE: MODEL:	
U.S.M.C. NO.	MILES
JOB ORDER NO.	HOURS
PRODUCTION NO.	
ENGINE NO.	
TRANSMISSION NO.	

INSPECTOR'S NAME	BADGE NUMBER	SHOP NUMBER

NOTE: THE FOLLOWING INSPECTION SHEETS ARE DIVIDED INTO SEVEN COLUMNS. THE INSPECTOR SHALL PLACE A CHECK IN THE COLUMN WHICH BEST DESCRIBES THE CONDITION OF THE ITEM BEING INSPECTED. FOR THOSE ITEMS THAT CANNOT BE INSPECTED FOR ANY REASON, THE INSPECTOR SHALL MAKE AN APPROPRIATE ANNOTATION IN THE REMARKS COLUMN. IF THE INSPECTOR FINDS A DEFECT THAT COULD CAUSE INJURY TO THE OPERATOR OR DAMAGE TO THE END ITEM, TESTING WILL CEASE UNTIL THE DEFECT IS CORRECTED OR THE DECISION IS MADE TO INDUCT THE VEHICLE INTO THE IROAN CYCLE.

APPENDIX A

PRE-TEST CHECKLIST - ALL MODELS

NOTE: During the walk around inspection, examine vehicle for general appea including paint, sheet metal rustproofing, workmanship type defects, and mi or damaged equipment. Paint scratches that do not penetrate the top coat a acceptable.

CHARACTERISTICS	SATFY	MISSNG	SERV	ADJ	REPAIR	REPL	MODIFY	REMARKS
1. FRONT OF VEHICLE								
a. Headlights/front marker lights								
(1) Damage								
(2) Security of mounting								
(2) Security of mounting								
b. Front glad hands								
(1) Hose, lines, and fitting for damage/looseness								
(2) Dust cover for damage/missing chain								
c. Windshield for damage								
d. Wiper arms and blades								
(1) Damage.								
(2) Proper mounting								
e. Lifting shackles.								
f. Self recovery winch (if equipped)								
(1) Hose, lines, and fittings, damage and looseness.								
(2) Cable for kinks and frays (top row).								
(3) Cable clevis for damage (lock pin installed).								
(4) Cable evenly wound and secured								
(5) Winch guide rollers for proper lubrication								
2. ENGINE COMPARTMENT								
a. Cold weather start aide								
(1) Security of mounting.								
(2) If temperature is below 45 degrees, insure bottle is connected								
b. Engine mount biscuits for damage/ looseness								
c. Fuel line connections for loose- ness/damage								
d. Compressor lines/fittings for looseness/damage.								

APPENDIX A

	SATFY	MISSNG	SERV	ADJ	REPAIR	REPL	MODIFY	REMARKS
e. Fan belts for damage.								
f. Fan rotates freely.								
g. Radiator for leaks/cooling fins for damage and or obstructions. .								
h. Engine oil check cold must be between low and full.								
i. Radiator level must be 1" below filler neck								
j. Transmission oil check cold must be at cold.								
k. Electrical connections for looseness/damage								
l. Air line connections for looseness/damage.								
m. Power steering reservoir cold check to cold mark.								
n. Steering arms and linkages for sufficient lubrication.								
o. Power steering oil cooler								
(1) Hose, lines, and fittings for damage/looseness.								
(2) Proper mounting								
(3) Leaks								
(4) Cooling fins for damage and or obstructions.								
p. Cab mount biscuits for damage/looseness								
3. CURB SIDE OF VEHICLE								
a. Side marker lamps for damage/security of mounting.								
b. Front wheel and tire.								
(1) Condition of tires (cuts, gouges, & uneven/excessive wear)								
(2) Lug nuts for obvious looseness								
c. Passenger door.								
(1) Door for ease of operation, fit and sealing								
(2) Window for ease of operation and damage.								
(3) Side mirrors for damage and security of mounting.								

	SATFY	MISSNG	SERV	ADJ	REPAIR	REPL	MODIFY	REMARKS
d. Steps for damage and security of mounting.								
e. Air reservoirs.								
(1) Pet cocks for freedom of movement.								
(2) Hoses, lines, and fittings for damage and looseness.								
f. Storage boxes								
(1) Security of mounting.								
(2) Hinges for damage and looseness								
(3) Water in boxes.								
g. Hydraulic reservoir								
(1) Leakage								
(2) Hose, lines, fittings for looseness/damage.								
(3) No rust on dipstick/filler neck								
(4) Fluid level 1/2 way between low and full.								
h. Intermediate/rear wheels and tires								
(1) Condition of tires (cuts, gouges, uneven and excessive wear)								
(2) Lug nuts for obvious looseness								
(3) Mud flaps torn/missing/bent hardware.								
(4) Fenders for security of mounting/bent/loose bolts . .								
4. REAR OF VEHICLE								
a. Rear tail lights.								
(1) Damage								
(2) Security of mounting.								
b. Pintle hook								
(1) Freedom of movement								
(2) Security of mounting.								
(3) Lock pin and chain secured. .								
c. Rear glad hands								
(1) Hose, lines, and fittings for damage/looseness.								
(2) Dust covers for damage/missing chains.								
d. Trailer light receptacle loose/ damaged								
e. Lifting shackles missing.								
f. Reflectors missing/damaged. . . .								

APPENDIX A

	SATFY	MISSNG	SERV	ADJ	REPAIR	REPL	MODIFY	REMARKS
5. ROADSIDE OF VEHICLE								
a. Intermediate/rear wheels and tires								
(1) Condition of tires (cuts, gouges, uneven, and excessive wear)								
(2) Lug nuts for obvious looseness								
(3) Mud flaps torn/missing/bent hardware.								
(4) Fenders for security of mounting/bent/loose								
b. Side marker lamps for damage/ security of mounting.								
c. Fuel tanks and lines.								
(1) Security of mounting.								
(2) Fuel lines and fittings for damage/looseness.								
d. Air intake stack for damage/ security of mounting.								
e. Air cleaner								
(1) Obvious damage.								
(2) Hoses/clamps/fittings for looseness/damage.								
(3) Dust cup installed.								
f. Drivers door.								
(1) Door for ease of operation/ fit/sealing								
(2) Window for ease of operation/ fit/sealing								
(3) Side mirrors for damage and security of mounting.								
g. Steps for damage/security of mounting.								
h. Cab mount biscuits for damage/ security.								
i. Front wheel and tire.								
(1) Condition of tires (cuts, gouges, and uneven excessive wear)								
(2) Lug nuts for obvious looseness								
6. REAR OF CAB								
a. Spare tire.								
(1) Damage.								
(2) Security of mounting.								

	SATFY	MISSNG	SERV	ADJ	REPAIR	REPL	MODIFY	REMARKS
b. Spare tire/carrier and davit assembly.								
(1) Tire securely mounted								
(2) Tire davit, winch cable/handle for damage.								
7. CAB INTERIOR								
a. Batteries and cables.								
(1) Fluid level (up to split ring)								
(2) Posts and cables for looseness and corrosion								
(3) Batteries for security of mounting.								
b. Glass for excessive scratches . .								
c. Seats for ability to adjust and security of mounting.								
d. Instruction and data plates . . .								
(1) Location and proper installation.								
(2) Correct information on all the plates.								
8. UNDERSIDE OF VEHICLE								
a. Front Suspension.								
(1) CV boot for damage.								
(2) Hoses, lines, fittings for looseness/damage.								
(3) Shock absorbers for looseness/ damage.								
(4) Input/output shafts for mounting, lube.								
(5) Input/output seals for leaks.								
(6) Breather caps for freeplay/ damage.								
(7) Front axle for proper level .								
b. Air Reservoirs.								
(1) Hoses/lines/fittings for damage/leaks/chafing.								
c. Transmission.								
(1) Mounting and security of components.								
(2) Leaks								

	SATFY	MISSNG	SERV	ADJ	REPAIR	REPL	MODIFY	REMARKS
d. Transfer case (8 point 5/8 in 1/2 in drive socket).								
(1) Mounting and security of components.								
(2) Check for proper level. . . .								
(3) Input/output shafts for damage/looseness.								
e. Rear suspension								
(1) Hoses, lines, and fittings for damage/looseness.								
(2) Input/output shafts for mounting, lube.								
(3) Input/output seals for leaks								
(4) Breather caps for freeplay. .								
(5) Intermediate/rear axles for proper levels								
9. TRUCK BODIES								
a. Cargo bodies.								
(1) Side and end panels for damage								
(2) Latches, hinges, and pins for damage.								
(3) Cargo tie downs for broken welds								
(4) Side racks for proper installation.								

TYPE OF VEHICLE 5-TON TRUCK	MODEL	CHASSIS SERIAL NO	USMC NO	MILEAGE
ACTIVITY	YEAR OF MANUFACTURE			

INSPECTION BY AUTHORIZED GOVT REP (SIGN & DATE)

GROUP	PART	SATISFACTORY	UNSATISFACTORY	GROUP	PART	SATISFACTORY	UNSATISFACTORY	COMMENTS
01	ENGINE			14	STEERING GEAR			
03	FUEL SYSTEM			15	FRAME			
03	TANK			15	TOWING CONNECTIONS			
03	INJECTORS			16	SHOCK ABSORBERS			
03	METER PUMP			16	SPRINGS			
03	ETHER START			18	FENDERS			
04	MUFFLER & TAIL PIPE			18	HOOD			
05	FAN & WATER PUMP			18	BED			
05	RADIATOR			18	CAB			
06	BATTERY			18	FLOOR			
06	INSTRUMENTS			18	GLASS			
06	GENERATOR			18	INTERIOR TRIM			
06	LIGHTS			18	SEATS & UPHOLSTERY			
06	STARTER							
06	REGULATOR			15	BUMPERS			
06	WIRING			18	BRUSH GUARD & GRILL			
07	TRANSMISSION							
08	TRANSFER			22	MIRRORS			
09	DRIVE SHAFT			22	WIPERS & ARMS			
10	FRONT AXLE							
11	INTER AXLE				PAINT			
11	REAR AXLE			33	FORDING KIT			
12	HAND BRAKE SYS			20	WINCH			
12	SERVICE BRAKE SYS			22	VEHICLE ACCESSORIES			
13	TIRES				ACCEPTANCE BY AUTHORIZED GOVERNMENT REPRESENTATIVE			
13	WHEELS							

APPENDIX C

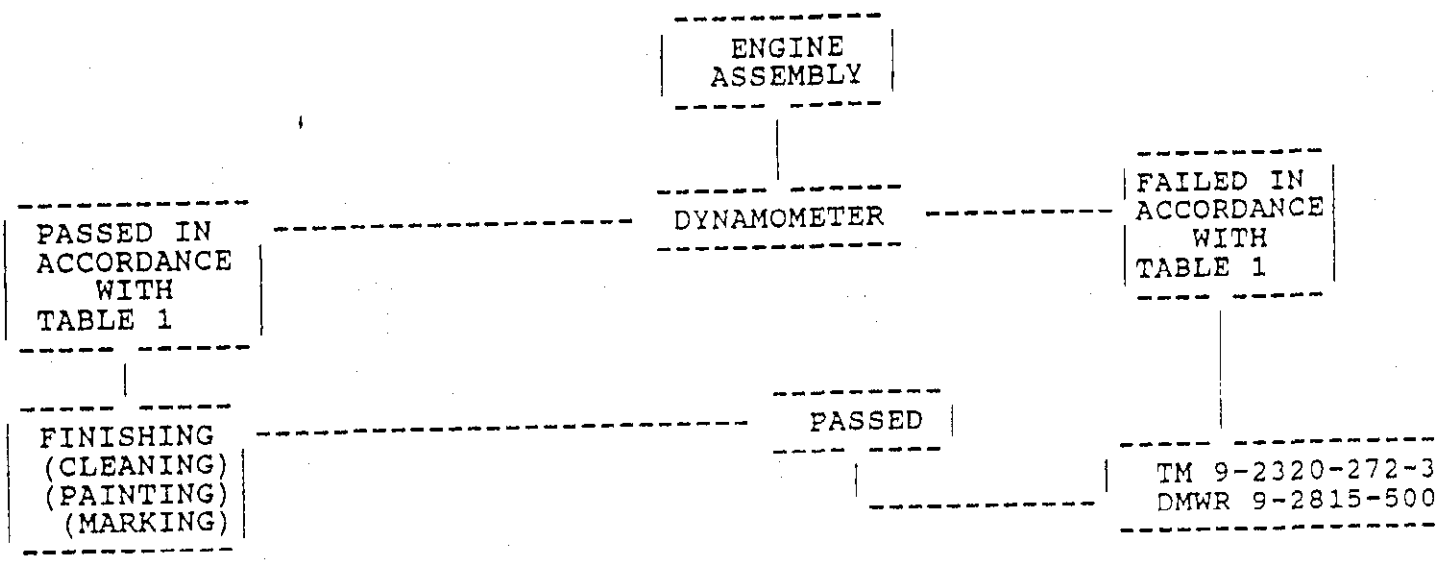

IROAN Pass/Fail Logic Chart - Engine Assembly

APPENDIX C

Acceptable Operating Specifications for NHC 250 Cummins Engine

Rated Power	Minimum 250 hp at 2100 rpm
Idle Speed	600 rpm
Minimum Engine Oil Pressure at Idle	10-30 psi at 225oF
Normal Engine Oil Pressure	30-70 psi at 1200 - 2100 rpm
Normal Oil Temperature	180-225oF
Normal Coolant Temperature	160-200oF
Normal Inlet Fuel Pressure	169-183 psi at 2100 rpm
Fuel Inlet Temperature	100oF maximum

APPENDIX C

DYNAMOMETER RUN-IN SCHEDULE

CUMMINS DIESEL IN-LINE (6) NHC250 - DYNAMOMETER TEST LOG ( )

Job Order No.: Serial No.: Date:

Test Period	Time in Minutes	Engine RPM	Dyno Load (H.P.)	Smoke Density	Oil Press	Oil Sump Temp	Water Temp	Fuel Press
	5	1000	20					
	30	1575	125					
	30	2100	188					
	30	2100	213					
	15	2100	225					
	5	2100	240 - 5%					
			FINAL CHECK RUN. TORQUE: Output _____ LB FT (651-685 corrected).					
	1	1500						
	10	1000	10					

T(G) Injector

. Normal lube oil pressure, 10 to 30 psi at 225o at idle.
. Normal lube oil pressure, 30 to 70 psi at 1200 to 2100 rpm. (30 psi min
. Lube oil sump temperature 240o maximum at 1200 to 2100 rpm.
. Normal coolant temperature, 160oF to 200oF.
. Normal inlet fuel pressure 169 to 183 psi at 2100 rpm. Actual _____o.
. Fuel inlet temperature 100o MAXIMUM. Actual _____o.
. Engine rpm: low idle 600; high idle, no load 2195-2215.

RUN-IN RECORD

Item No.		Test Results	Operator's Initials
1.	VV-F-800 Diesel Fuel Used _____		
2.	MIL-L-21260 15W/40W Oil Used _____		
3.	Corrected bhp at 2100 rpm Brake Horsepower	_____ (235 lb. ft. min.)	

APPENDIX C

RUN-IN RECORD (CUMMINS DIESEL IN-LINE (6) NHC250)

REMARKS:

1. If abnormal noise, describe conditions _____

_____

2. Smoothness at idle _____

3. Engine malfunction _____

_____

_____

Operator_____ Date_____ Inspector_____ Date_

CORRECTION FACTORS

1. Horsepower Correction Data: _____
   a. Barometric pressure in HG: _____
   b. Wet bulb temperature oF: _____
   c. Dry bulb temperature oF: _____
   d. Observed HP: _____
   e. Corrected HP: _____
   f. Torque output @ 1500: _____
   g. Torque output corrected @ 1500: _____

APPENDIX D

HICKLIN
DYNAMOMETER RUN SHEET
MT-654 TRANSMISSION

SERIAL NO. _____ DATE _____

OPERATOR _____

Fill transmission to operating level with OE/HDO-10 weight oil, conforming MIL-L-2104C.

Set test stand drive unit for clockwise rotation.

Set input at 1200 rpm, closed throttle modulator setting, output unloaded, transmission through all ranges to fill clutches.

With output stalled, full throttle modulator setting, drive 4(5) range, sta transmission until fluid temperature reaches 170oF.

Check and reestablish correct fluid level.

APPENDIX D

MT-654CR TRANSMISSION DYNAMOMETER RUN SHEET

Test	RPM	Throttle	Output	Specified Reading:	Actual
				Main Pressure (290-315 psi)	_____
				Reverse Signal Pressure (290-314 psi)	_____
Reverse	2000±20	Full	Unloaded	Converter Flow (6.8 gpm min.)	_____
				Lube pressure (Cooler out) - (15 psi)	_____

Test	RPM	Throttle	Range	Output	Output Torque (lb. ft. 1020) Minimum at Input Speed (rpm 750)	Main Pressure
Stall	1200±20	Full	4(5)	Stall	Actual _____	Required 180-205 psi Actual _____

Test	RPM	Throttle	Range		Main Pressure
Idle	600±20	Closed	4(5)	Minimum 160 psi	Actual _____

Test	Range	Throttle	Output	Shift Point	Req rpm	Actual
Full Throttle Upshift	4(5)	Full	Loaded 500-1000	L-1	375-440	_____
				1C-1L	690-830	_____
				1-2	910-975	_____
				2-3	1125-1290	_____
				3-4	1585-1675	_____

Test	Range	Throttle	Output	Shift Point	Req rpm	Actual
Closed Throttle Downshift	4(5)	Closed	Loaded 500-1000	4-3	845-1260	_____
				3-2	705-900	_____
				2-1	535-690	_____
				1L-1C	460-590	_____
				1-L	225-315	_____

NOTE: Increase load until downshift occurs.

Test	Range	Throttle	Output	Shift Point	Req rpm	Actual
Downshift Inhibitor	4(5)	Full	Loaded 500-1000	4-3	1840-2070	_____
				3-2	1360-1555	_____
				2-1	970-1180	_____
				1-L	475-695	_____

NOTE: Reduce input speed with each gear downshift.

APPENDIX E

FINAL ROAD TEST CHECK LIST
ATTACHMENT NO. 1

ALL SAFETY CHECKS MUST BE SATISFACTORILY COMPLETED PRIOR TO ROAD TESTS.

IF NECESSARY, BEFORE PERFORMING ALL TESTS AND CHECKS, WIPE DOWN COMPONENTS WHERE GREASE, OIL, OR DIRT COULD POSSIBLY FORM.

THE FOLLOWING ITEMS SHALL BE CHECKED DURING THE VEHICLE STATIC TEST WITH THE VEHICLE ENGINE OPERATING.

LOW AIR LIGHTBUZZER WILL REMAIN ON UNTIL SYSTEM PRESSURE REACHES 60 PSI.

DO NOT JUMP START VEHICLE WITH LIGHT SWITCH ON.

	SATFY	MISSNG	SERV	ADJ	REPAIR	REPL	MODIFY	REMARKS	INSP
1. Check the following gauges for correct readings.									
a. Tachometer reading 600 + 50 rpm at idle									
b. Engine oil pressure, minimum of 10 psi at idle.									
c. Low air buzzer/light.									
d. Air cleaner restriction indicator									
e. Battery gauge registers in the green									
f. Fuel gauge registers equivalent to tank level									
g. Engine coolant 175 to 195o F (after road test)									
h. Transmission oil temperature 120 to 220o F (after road test) . . .									
i. Primary air pressure 90 to 128 PSI									
j. Secondary air pressure 90 to 128 PSI									
2. Cab controls (can be done on road test)									
a. Windshield washer									
b. Windshield wipers left and right									
c. Heater/defroster fan.									
d. Heater ducts for air.									
e. Defroster ducts for air									
f. Transfer case									
(1) Shift level for ease of operation									
(2) Operates in high and low. . .									

	SATFY	MISSNG	SERV	ADJ	REPAIR	REPL	MODIFY	REMARKS	INSP
g. Horn for proper operation									
h. Brake operation (does not pull or stall when applied for a quick stop)									
(1) Park brake holds with transmission in gear									
(2) Park brake release operates properly.									
(3) Service brakes operate properly									
(4) Unusual noises.									
i. Transmission operation.									
(1) Drive (all gears) and reverse									
(2) Transmission shifts smoothly.									
(3) Unusual noises.									
j. Accelerator									
(1) Accelerates smoothly.									
(2) Doesn't stick or bind									
k. Steering.									
(1) Operates smoothly									
(2) Does not wander or pull . . .									
3. Lights (operational).									
a. Dash panel.									
b. Shift selector.									
c. Headlights - high and low beam. .									
d. Clearance/side marker lights. . .									
e. Turn signals left/right and front/rear.									
f. Emergency flashers.									
g. Front axle engagement									
h. Blackout lights									
i. Tail lights, brake lights, left/right									
4. Road Test									
a. Unusual noise									
b. Excessive vibration									
c. Transmission fluid hot check (approx.. 180o) level on dip stick between add and full.									
5. Exhaust System (loose stack/misalignment/missing bonnet).									
a. Excessive smoke									
b. Vibration									

SATFY	MISSNG	SERV	ADJ	REPAIR	REPL	MODIFY	REMARKS	INSP

6. **Major components**									
a. Leakage									
7. **Paint**									
a. Flaking paint									
b. Scratches that penetrate the top coat.									
8. **Sheet metal damage** (cab, hood, body, etc.)									
9. **Miscellaneous** . . . . . (Items not previously addressed on Final Road Test Check List)									

CONTRACT DATA REQUIREMENTS LIST

(1 Data Item)

Form Approved
OMB No. 1704-0188

The Public reporting burden for this collection of information is authorized to average 110 hours per response, including the time for reviewing instructions, searching existing data sources, gathering and maintaining the data needed, and completing and reviewing the collection of information. Send comments regarding this burden estimate or any other aspect of this collection of information, including suggestions for reducing this burden, to Department of Defense, Washington Headquarters Services, Directorate for Information Operations and Reports 1215 Jefferson Davis Highway, Suite 1204, Arlington, VA 22202-4302 and to the Office of Management and Budget, Paperwork Reduction Project (0704-0188), Washington, DC 20503. Please DO NOT RETURN your form to either of these addresses. Send completed form to the Government issuing Contract Officer for the contract/PR No. listed in block E.

A. CONTRACT LINE ITEM NO.	B. EXHIBIT	C. CATEGORY: TDP ____ TM ____ Other XXX
D. SYSTEM/ITEM M818/M931/M931A1 5-Ton Trucks	E. CONTRACT/PR No.	F. CONTRACTOR
1. DATA ITEM No A001	2. TITLE OF DATA ITEM Contractor's Progress, Status, and Management Report	3. SUBTITLE Monthly Progress Report
4. AUTHORITY *(Data Acquisition Document No.)* DI-MGMT-80227	5. CONTRACT REFERENCE SOW 4.1	6. REQUIRING OFFICE MARCORLOGBASES (835)

17. PRICE GROUP

18. ESTIMATED TOTAL PRICE

7. DD 250 REQ.	9. DIST STATEMENT REQUIRED	10. FREQUENCY	12. DATE OF FIRST SUBMISSION
LT	A	MTHLY	See Blk 16
8. APP CODE		11. AS OF DATE	13. DATE OF SUBSEQUENT SUBMISSION
			See Blk 16

16. REMARKS

Contractor format is authorized.

Block 4 – Tailor DI-MGMT-80227 as follows: Delete paragraphs 10.3g, 10.3h, 10.3i, 10.3j, 10.3k, and 10.3n.

Block 12 – The reporting period shall be from the first to last business day of each month. Initial submission shall be 60 days after contract.

Block 13 – Subsequent submissions shall be 10 days after the last business day of each month.

Distribution Statement A: Approved for public release, distribution is unlimited.

14. DISTRIBUTION			
a. ADDRESSEE	b. COPIES		
	Draft	FINAL Reg	FINAL Repro
MCLBA (835-2)	0	1	0
15. TOTAL	0	1	0

G. PREPARED BY:	H. DATE	I. APPROVED BY:	J. DATE
	2-22-00		2-22-00

DD FORM 1423-1, AUG 96 (EG) PREVIOUS EDITION MAY BE USED

Designed using Perform Pro, WHS/D/or, Aug 96

CONTRACT DATA REQUIREMENTS LIST

(1 Data Item)

Form Approved
OMB No. 1704-0188

The Public reporting burden for this collection of information is authorized to average 110 hours per response, including the time for reviewing instructions, searching existing data sources, gathering and maintaining the data needed, and completing and reviewing the collection of information. Send comments regarding this burden estimate or any other aspect of this collection of information, including suggestions for reducing this burden, to Department of Defense, Washington Headquarters Services, Directorate for Information Operations and Reports 1215 Jefferson Davis Highway, Suite 1204, Arlington, VA 22202-4302 and to the Office of Management and Budget, Paperwork Reduction Project (0704-0188), Washington, DC 20503. Please DO NOT RETURN your form to either of these addresses. Send completed form to the Government issuing Contract Officer for the contract/PR No. listed in block E.

A. CONTRACT LINE ITEM NO.	B. EXHIBIT	C. CATEGORY: TDP ____ TM ____ Other XXX

D. SYSTEM/ITEM	E. CONTRACT/PR No.	F. CONTRACTOR
M818/M931/M931A1 5-Ton Trucks		

1. DATA ITEM No	2. TITLE OF DATA ITEM	3. SUBTITLE
B001	Repairable Item Inspection Report	

4. AUTHORITY *(Data Acquisition Document No.)*	5. CONTRACT REFERENCE	6. REQUIRING OFFICE
DI-ILSS-80386	SOW 4.2	MARCORLOGBASES (835)

7. DD 250 REQ.	9. DIST STATEMENT REQUIRED	10. FREQUENCY	12. DATE OF FIRST SUBMISSION
LT	A	AS REQ	See Blk 16

8. APP CODE	11. AS OF DATE	13. DATE OF SUBSEQUENT SUBMISSION
		See Blk 16

17. PRICE GROUP

18. ESTIMATED TOTAL PRICE

14. DISTRIBUTION

a. ADDRESSEE	b. COPIES Draft	FINAL Reg	FINAL Repro
MCLBA (835-2)	0	1	0
15. TOTAL	0	1	0

16. REMARKS

Block 4 - Contractor format is authorized.

Block 10 - A separate report shall be submitted for each M818/M931/M931A1 5-Ton Trucks repaired.

Block 12 & 13 – Submit report by Marine Corps Serial Number 30 days after completion of each M818/M931/M931A1 5-Ton Trucks.

Block 14 – Reports shall be provided hard copy.

Distribution Statement A: Approved for public release, distribution is unlimited.

G. PREPARED BY:	H. DATE	I. APPROVED BY:	J. DATE
Jeffrey Verrel	2-22-00	Frank Shy	2-22-00

DD FORM 1423-1, AUG 96 (EG) PREVIOUS EDITION MAY BE USED

Designed using Perform Pro, WHS/D/or, Aug 96

CONTRACT DATA REQUIREMENTS LIST

(1 Data Item)

Form Approved
OMB No. 1704-0188

The Public reporting burden for this collection of information is authorized to average 110 hours per response, including the time for reviewing instructions, searching existing data sources, gathering and maintaining the data needed, and completing and reviewing the collection of information. Send comments regarding this burden estimate or any other aspect of this collection of information, including suggestions for reducing this burden, to Department of Defense, Washington Headquarters Services, Directorate for Information Operations and Reports 1215 Jefferson Davis Highway, Suite 1204, Arlington, VA 22202-4302 and to the Office of Management and Budget, Paperwork Reduction Project (0704-0188), Washington, DC 20503. Please DO NOT RETURN your form to either of these addresses. Send completed form to the Government issuing Contract Officer for the contract/PR No. listed in block E.

A. CONTRACT LINE ITEM NO.	B. EXHIBIT	C. CATEGORY: TDP ____ TM ____ Other XXX

D. SYSTEM/ITEM	E. CONTRACT/PR No.	F. CONTRACTOR
M818/M931/M931A1 5-Ton Trucks		

1. DATA ITEM No.	2. TITLE OF DATA ITEM	3. SUBTITLE
C001	Request for Waiver (RFW)	Configuration Management

4. AUTHORITY *(Data Acquisition Document No.)*	5. CONTRACT REFERENCE	6. REQUIRING OFFICE
DI-CMAN-80641B	SOW 3.3	MARCORLOGBASESALB 825

7. DD 250 REQ.	9. DIST STATEMENT REQUIRED	10. FREQUENCY	12. DATE OF FIRST SUBMISSION
LT	A	AS REQ	See Blk 16

8. APP CODE	11. AS OF DATE	13. DATE OF SUBSEQUENT SUBMISSION

17. PRICE GROUP

18. ESTIMATED TOTAL PRICE

14. DISTRIBUTION

a. ADDRESSEE	b. COPIES Draft	FINAL Reg	FINAL Repro
MCLBA 825-2	0	1	0
15. TOTAL	0	1	0

16. REMARKS

Block 4: Contractor format using .doc or .pdf software is authorized.

Blocks 10 & 12: RFWs shall be submitted to obtain authorization to deliver nonconforming material which does not meet the prescribed configuration documentation.

RFWs will be reviewed and disposition determined within 30 calendar days upon receipt by the government.

RFWs shall be transmitted via e-mail to the following address: mbmatcomconfigmngmnt@matcom.usmc.mil

Distribution Statement A: Approved for public release, distribution is unlimited.

G. PREPARED BY:	H. DATE	I. APPROVED BY:	J. DATE
Diane L Bradley	FEB 14 2000	Frank [signature]	2-22-00

DD FORM 1423-1, AUG 96 (EG) PREVIOUS EDITION MAY BE USED

Designed using Perform Pro, WHS/D/or, Aug 96

CONTRACT DATA REQUIREMENTS LIST

(1 Data Item)

Form Approved
OMB No. 1704-0188

The Public reporting burden for this collection of information is authorized to average 110 hours per response, including the time for reviewing instructions, searching existing data sources, gathering and maintaining the data needed, and completing and reviewing the collection of information. Send comments regarding this burden estimate or any other aspect of this collection of information, including suggestions for reducing this burden, to Department of Defense, Washington Headquarters Services, Directorate for Information Operations and Reports 1215 Jefferson Davis Highway, Suite 1204, Arlington, VA 22202-4302 and to the Office of Management and Budget, Paperwork Reduction Project (0704-0188), Washington, DC 20503. Please DO NOT RETURN your form to either of these addresses. Send completed form to the Government issuing Contract Officer for the contract/PR No. listed in block E.

A. CONTRACT LINE ITEM NO.	B. EXHIBIT	C. CATEGORY: TDP ____ TM ____ Other XXX
D. SYSTEM/ITEM M818/M931/M931A1 5-Ton Trucks	E. CONTRACT/PR No.	F. CONTRACTOR
1. DATA ITEM No. C002	2. TITLE OF DATA ITEM Request for Deviation (RFD)	3. SUBTITLE Configuration Management
4. AUTHORITY *(Data Acquisition Document No.)* DI-CMAN-80640B	5. CONTRACT REFERENCE SOW 3.3	6. REQUIRING OFFICE MARCORLOGBASESALB 825

7. DD 250 REQ.	9. DIST STATEMENT REQUIRED	10. FREQUENCY	12. DATE OF FIRST SUBMISSION
LT	A	AS REQ	See Blk 16
8. APP CODE		11. AS OF DATE	13. DATE OF SUBSEQUENT SUBMISSION

17. PRICE GROUP

18. ESTIMATED TOTAL PRICE

16. REMARKS

Block 4: Contractor format using .doc or .pdf software is authorized.

Blocks 10 & 12: RFDs shall be submitted to obtain authorization to deliver nonconforming material which does not meet the prescribed configuration documentation.

RFDs will be reviewed and disposition determined within 30 calendar days upon receipt by the government.

RFDs shall be transmitted via e-mail to the following address: mbmatcomconfigmngmnt@matcom.usmc.mil

Distribution Statement A: Approved for public release, distribution is unlimited.

14 DISTRIBUTION			
a. ADDRESSEE	b. COPIES Draft	FINAL Reg	FINAL Repro
MCLBA 825-2	0	1	0
15. TOTAL	0	1	0

G. PREPARED BY:	H. DATE	I. APPROVED BY:	J. DATE
Diane L. Bradley	FEB 14 2000	Frank Ly	2-22-00

DD FORM 1423-1, AUG 96 (EG) PREVIOUS EDITION MAY BE USED

Designed using Perform Pro, WHS/D/or, Aug 96