SOW-00-837-2-09166A-2/1

STATEMENT OF WORK

FOR THE

CRANE, WHEEL MOUNTED, HYDRAULIC, LIGHT,

7 ½ TON

(ROUGH TERRAIN CRANE)

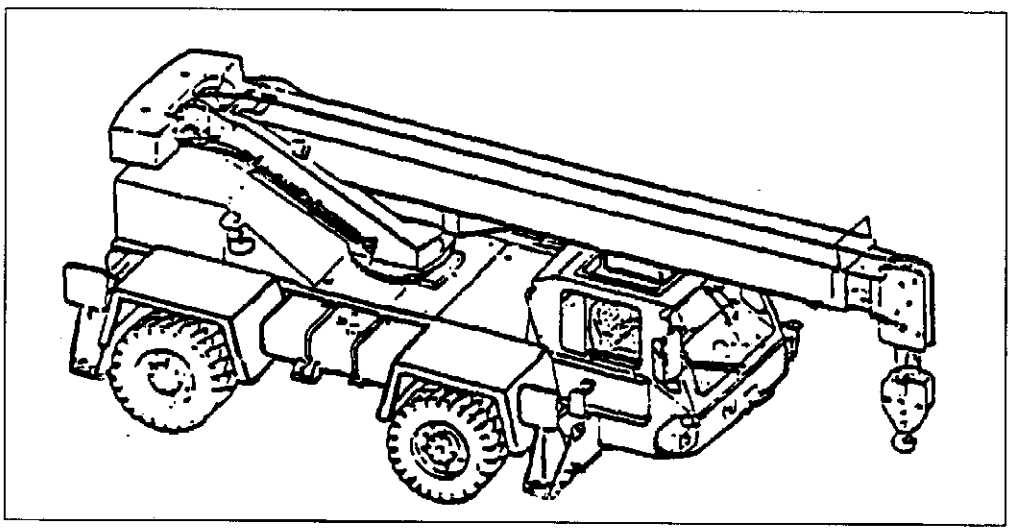

NSN 3810-01-165-0646

EFFECTIVE DATE 01 October 1999

TABLE OF CONTENTS

Section and Reading		Page
1.0	Scope	1
1.1	Background	1
2.0	Applicable Documents	1
2.1	Military Specifications	1
2.2	Military Standards	1
2.3	Other Government Documents and Publications	2
2.4	Industry Standards	2
3.0	Requirements	2
3.1	General Tasks	2-3
3.2	IROAN Objective and functions	3
3.3	Specific Tasks	3
3.3.1	Phase 1-Pre-induction	3-4
3.3.2	Phase II IROAN	4-14
3.3.3	Phase III Inspection, Testing and Acceptance	14-15
3.3.4	Phase IV Packaging Handling Storage and Transportation (PHS&T)	15
3.4	Configuration Management	15
3.4.1	Configuration Status Accounting (CSA)	15-16
3.4.2	Configuration Control	16
3.5	Government Furnished Equipment (GFE) Accountability/Government Furnished Equipment (GFM)	16
3.6	Contract Furnished Materiel (CFM)	16
3.7	Quality Assurance Provisions	16-17
3.8	Acceptance	17
3.9	Rejection	17
4.0	Reports	18
4.1	Pre-Induction Checklist	18
4.2	Final Inspection Checklist	18

4.3 Configuration Checklist 18

4.4 Load Test Certification/ condition Inspection Report 18

Appendix A Pre-Iduction Check Sheets

Appendix B Final Road Test Check List

Appendix C Configuration Inspection Check List

STATEMENT OF WORK FOR THE CRANE WHEEL MOUNTED, HYDRAULIC, LIGHT, (CRANE 7 ½ TON)

1.0 **SCOPE.** This Statement of work (SOW), establishes and sets forth tasks and identifies the work efforts that shall be performed by the contractor in the IROAN effort of the Crane. This document contains requirements to restore the Crane to Condition Code "A." Condition Code A is defined as serviceable/issuable without qualification. Equipment defined as such should be new, used, repaired or reconditioned material which is serviceable/issuable to all customers without limitation or restriction. This includes material with more than 6 months shelf-life remaining. National Stock Number (NSN) shall be known as the Crane 3810-01-165-0646.

1.1 **BACKGROUND.** IROAN is defined as "the maintenance technique which determines the minimum repairs necessary to restore equipment components or assemblies, and the prescribed standards utilizing all available diagnostic equipment and test procedures minimize disassembly and parts replacement."

2.0 **APPLICABLE DOCUMENTS.** The following documents form a part of this SOW to the extent specified. Unless otherwise specified, issues of these documents are those listed which are in effect on the date of solicitation. In the event of conflict between the documents referenced herein and the contents of this SOW, the contents of this SOW shall be the superseding requirement.

2.1 **MILITARY SPECIFICATIONS.**

MIL-C-81309E	Corrosion Preventive Compounds, Water Displacing. Ultra-Thin Film

2.2 **MILITARY STANDARDS**

MIL-STD 129	DoD Standard Practice For Military Marking.
MIL-STD 130	U.S. Military Property, Identification Marking of
MIL-STD 642	DoD Standard Practice for Identification Marking of Combat and Tactical Transport Vehicles.

MILITARY STANDARD (GUIDANCE ONLY)

MIL-STD-973	Configuration Management.

2.3 **OTHER GOVERNMENT DOCUMENTS AND PUBLICATIONS.** The issues of these documents cited below shall be used.

TM5-3810-305-10	Operator's manual for Crane, Wheel, Mounted, Hydraulic, Light, 7 ½ Ton.
TM5-3810-305-24P	Unit, Direct Support, and General Support Maintenance Repair Parts and Special Tools Lists.
TM5-3810-305-24	Preventive Maintenance Checks and Services Schedule.
ATPD2241	Vehicles, Wheeled: Preparation for Shipment and Storage.
MCO P11262.2A	Inspection, Testing, and Certification of Tactical Ground Load Lifting Equipment.
TM-4750-15/2	Painting and Registration Marketing for Marine Corps Combat and Tactical Equipment.
DoD 4000.51-M	MILSTRIP Manual
NAVICPINST 4491.2A	Requisitioning of Contractor Furnished Materiel From The Federal Supply System.
TM 3080-34	Corrosion Prevention and Control

2.4 **INDUSTRY STANDARDS.**

ANSI/ISO/ASQC Q9002-1994	Quality Systems.

Copies of Military Specifications and Standards are available from the Naval Publications and Forms Center, (ATTN: NPODS), 5801 Tabor Avenue, Philadelphia, PA 19120-5099. Copies of other government documents and publications required by contractors in connection with specific SOW requirements shall be obtained through the Contracting Officer: Commander, Attn: Contracting Officer (Code 891) Marine Corps Logistics Bases, 814 Radford Blvd., Albany, Georgia 31704-1128, commercial telephone number (912) 439-6761 or DSN 567- 6761. Copies of engineering drawings, if applicable, shall be obtained from Life Cycle Management Center, Attn: Code 825-3, 814 Radford Blvd. Suite 20320, Albany, Georgia 31704-0320, commercial telephone number (912) 439-6410 or DSN 567-6410.

3.0 **REQUIREMENTS**

3.1 **GENERAL TASKS**. In fulfilling the specified requirements, the contractor shall:

a. Provide materials, labor, facilities, missing parts, and repair parts necessary to inspect, diagnose, restore, and test the Crane. Upon completion of IROAN, repaired equipment shall be Condition Code "A".

b. Provide all tools and test equipment required to test, inspect, and calibrate the Crane.

c. In-process and final on-site testing must be witnessed by MCLB Albany representative.

d. The contractor shall be responsible for all structural, electrical and mechanical requirements associated with the restoration of the Crane.

3.2 **IROAN OBJECTIVE AND FUNCTIONS**. After IROAN, the Crane, shall have the following minimum characteristics:

a. Reliable as per system specifications

b. Maintainable as per system specifications

c. Serviceable (Condition Code "A")

d. All vehicle systems and components shall operate as intended.

e. All Cranes shall have a like new appearance.

3.3. **SPECIFIC TASKS.** The following tasks describe the different phases for IROAN of the Crane.

Phase I	Pre-Induction
Phase II	IROAN
Phase III	Inspection, testing and acceptance
Phase IV	Packaging, Handling, Storage and Transportation (PHS&T)

3.3.1. **PHASE I-PRE-INDUCTION.**

a. A pre-induction inspection analysis shall be performed for the Crane using the contractor diagnosis, inspection and testing techniques to determine extent of work and parts required. These findings shall be annotated on the Pre- Induction Check Sheets located in Appendix A and shall be maintained and be made available upon request to the MCLB Albany, representatives.

b. Test equipment shall be used to determine that assemblies and subassemblies meet prescribed reliability, performance, and work requirements. In cases when conformance to the SOW cannot be certified through existing inspection and testing procedures and by use of diagnostic equipment, the assembly shall be removed, disassembled, inspected, tested or repaired to the degree necessary to assure full conformance with this SOW.

c. Oil seal and gasket leakage. Evidence of lubricating or hydraulic oils passing through or around a seal is not a defect; however, consideration must be given to the fluid capacity in the item being checked/inspected. Inspection shall normally be performed during and immediately following an operational test, but not sufficient duration to allow the fluids to return to ambient temperature. The following shall be used as a guide in determining degree of oil loss:

(1) Class I - Seepage of fluid (indicated by wetness or discoloration) not great enough to form drops.

(2) Class II - Leakage of fluid great enough to form drops, but not enough to cause drops to fall from the item being checked/inspected.

(3) Class III - Leakage of fluid great enough to form drops that fall from the item being checked/inspected.

NOTE: A CLASS I OR II LEAK, EXCEPT FUEL SYSTEM AND BRAKE SYSTEM, IS AN ACCEPTABLE CONDITION AT ANY TIME AND DO NOT REQUIRE CORRECTIVE ACTION.

3.3.2 **PHASE II - IROAN**. IROAN shall be performed at the contractor facility. Information recorded on IROAN Pre-Induction Check Sheets during pre-inspection phase shall be used as a guide by the contractor to achieve the mechanical baseline of production. After pre-induction check and inspections have been completed, repair of the Crane shall be accomplished in accordance with this SOW and IROAN STANDARD. Deficiencies noted on the Pre-Induction Check Sheets during Phase I shall be repaired/replaced. Components or assemblies shall not be disassembled for replacement of mandatory parts unless that part has failed, or the component assembly wherein the part is located is disassembled for repair. Mandatory replacement parts are contained in TM 5-3810-305-24P. The Final Road Test Check Sheet shall be completed and can be found in Appendix B of this SOW.

a. **Service and Parts Manual**: The Service and Parts Manuals listed below contains repair procedures and repair parts for the Crane. The Trouble Shooting Guide contained in these manuals are to be used along with the Pre-Induction Checklist in helping identify deficiencies with the Crane. Repair procedures contained in these manuals are to be used to repair deficiencies identified on the Pre-Induction Checklist.

TM5-3810-305-10	Operator's Manual for Cranes, Wheel Mounted, Hydraulic, Light, 7 ½ Ton.
TM5-3810-305-24	Preventive Maintenance Checks and Services Schedule.
TM 5-3810-305-24P	Unit, Direct Support, and General Support Maintenance Repair Parts and Special Tools List

The following efforts shall be performed as part of the IROAN:

DETAILED MECHANICAL WORK. The Crane received for IROAN shall be repaired in accordance with the following paragraphs. All discrepancies noted on the IROAN Pre-Induction Check Sheets shall be repaired/replaced.

b. **HARDWARE**

(1) Replace broken, unserviceable and/or missing hardware including nuts, bolts, screws, washers, turnlock fasteners, safety, and one-time use items, etc, in accordance with the TM5-3810-305-24P. Unserviceable would include any of the above that failed to function properly.

(2) Ensure proper hardware locking devices are present on all moving mechanical assemblies.

(3) Hardware normally supplied with commercial parts shall be used unless specifically prohibited.

(4) Hardware used shall be in accordance with TM5-3810-305-24P.

c. **ENGINE ASSEMBLY/TRANSMISSION**

(1) TEST PROCEDURES. After all pre-induction tests and inspection have been completed, the power pack shall be removed from the equipment, steam cleaned, and inspected for loose or missing items. All warnings and procedures should be followed to ensure safe and working conditions.

The engine run-in test shall be performed. Refer to paragraph 3.2.2C for test procedures for the fuel system which shall be tested in conjunction with the engine.

Record all results of the Pre-Induction Check Sheets in Appendix A. Pre-Induction Check Sheets shall be maintained and be available to Code 837-2 MCLB Albany representatives.

The Transmission shall be processed in accordance with paragraph 3.2.2 G.

Test the following. in accordance with TM5-3810-305-24 to conform with inspection and testing procedures to assure full conformance with this SOW.

(2) PASS/FAIL. After the engine run test has been completed. The engine assembly shall meet or exceed the minimum specifications in TM5-3810-305-24.

The above procedures for repair/replacement can be found in TM 5-3810-305-24.

d. **FUEL SYSTEM.**

(1) Test Procedures. Test the following. in accordance with TM5-3810-305-24 to

conform with inspection and testing procedures to assure full conformance with this SOW.

Test all fuel injectors in accordance with TM5-3810-305-24.

(a) Inspect the fuel pump assembly for loose or broken items and housing cracks.

(b) Inspect Injector Nozzles.

(c) Inspect the Lift Pump.

(d) Inspect fuel tank and lines for rusting and leakage.

(e) Inspect either Cold Start Device. Inspect engine cold starting switch, wiring and preheater.

(f) Inspect accelerator pedal and linkage for binding and proper function.

(g) Inspect Fuel Pressure Switch and Transducer.

(2) PASS/FAIL. Repair/Replace injectors and all of the above that are not functioning properly.

NOTE: Replace all fuel filters and air filters 100 percent.

The above procedures for repair/replacement can be found in TM5-3810-305-24

e. **HYDRAULIC SYSTEM.**

(1) TEST PROCEDURES. Test the entire hydraulic system along with the following components listed below in accordance with TM5-3810-305-24 to conform with inspection and testing procedures to assure full conformance with this SOW.

(a) Hydraulic and fluid system.

(b) Main Hydraulic Pump.

(c) Hydraulic Ground Driven Steering Pump.

(d) Hydraulic Controls.

(e) Filter Lines and Fittings.

(f) Hydraulic Cylinders.

(g) Tank, Hydraulic.

(h) Swing Motor.

(i) Rotary Manifold.

(j) Hydraulic Reservoir.

(k) Hydraulic System Valve Bank.

(l) Outrigger Solenoid Valve.

(m) Steering Selector Valve.

(n) Outrigger Hydraulics.

(o) Master Cylinder.

NOTE: Inspect all Hydraulic lines, clamps and fittings

(2) PASS/FAIL. Repair/Replace any of the above if fail in accordance with TM5-3810-305-24. Tube lines that are pinched or dented replace. Replace hose if any of the following conditions exist.

(a) Replace if any evidence of hydraulic oil leakage at the surface of the hose or its junction with the metal end couplings.

(b) Replace if any blistering or abnormal deformation to the outer covering of the hose.

(c) Replace if hydraulic oil leak at any threaded or clamped joint that cannot be eliminated by normal tightening.

(d) Replace if evidence of abrasion or scrubbing on the outer surface of hose or hoses.

The above procedures for repair/replacement can be found in TM5-3810-305-24.

f. **COOLING SYSTEM.**

(1) TEST PROCEDURES. Inspect the following. in accordance with TM5-3810-305-24 to conform with inspection and testing procedures to assure full conformance with this SOW.
Inspect hose clamps for tightness.

(a) Check cooling system for leaks.

(b) Check radiator cap.

(c) Inspect thermostat and housing for leaks.

(d) Inspect Fan Belt.

(e) Inspect fan blades for breaks, bends, and missing rivets.

(f) Inspect water pump for leaks and cracks.

(g) Inspect Radiator and Oil Cooler for cracks and leaks.

(2) PASS/FAIL. Replace coolant, coolant belts, heater and radiator hoses. Replace anti-freeze protection. Replace any hose or the above equipment that fail test in accordance with TM5-3810-305-24.

g. **ELECTRICAL SYSTEM**

The Electrical System is a 24 volt charging system.

(1) TEST PROCEDURES. Inspect all wiring harnesses, battery cables for corrosion, bent or missing pins, and ripped or torn insulation and tie wraps. The following electrical systems should be tested/inspected.

(a) Alternator

(b) Boom Electrical.

(c) Starting Motor & Solenoid.

(d) Instrument Control Panel.

(e) Switches/Circuit Breakers, Panel Electrical Gauges.

(f) Front Lights, Rear Lights and Work Lights.

(g) Sending Units & Warning Switches.

(h) Horn & Alarm.

(i) Batteries, Storage/Batteries

(j) Cab Main Harness, Main Engine Wiring Harness.

(k) Axle Centering Light Switch Assembly.

(l) STE/ICE DCA Connector/Resistor Module.

(2) PASS/FAIL. Repair/Replace all missing and bent pins. Repair of insulation less than four inches in length may be accomplished using electrical tape. Tears or rips in excess of four inches shall require installation of new conduit. Corrosion shall be removed from components. Upon removal of corrosion, if component does not function properly, replace component. Replace all damaged battery cables. Replace any missing or damaged tie wraps.

h. **AXLES**

(1) TEST PROCEDURES. Inspect the following in accordance with TM5-3810-305-24 to insure full conformance with this SOW.

(a) Front and Rear Axle Assembly.

(b) Front Axle.

(c) Front Differential with Brake.

(d) Axle Housing.

(e) Rear Differential.

(f) Front and Rear Tie Rods.

(g) Front and Rear Pivot and Spindle Assembly.

(2) PASS/FAIL. Repair the above equipment in accordance with TM5-3810-305-24 to conform with inspection and testing procedures to assure full conformance with this SOW.

i. **TRANSMISSION**

(1) Inspect in accordance with TM5-3810-305-24 to conform with inspection procedures to assure full conformance with this SOW.

(a) Transmission Assembly and Associated Parts.

(b) Transmission Hoses, Lines and Fittings.

(c) Output Disconnect Group.

(d) Transmission Controls.

(e) Drive Plate Group and Converter Assembly.

(f) First Stagc Clutch Group.

(g) Second Stage Clutch Group.

(h) Third Stage Clutch Group.

(i) Input Shaft Group.

(j) Charge Pump.

(k) Pump Adapter.

(l) Control Valve.

(m) Control Pressure Valve.

(n) Clutch Pack Pressure Test.

(o) Transmission 2wd/4wd Linkage.

(2) PASS/FAIL. Repair/Replace the transmission linkage assembly if it does not operate smoothly. Replace all broken cables.

On completion of inspection, the transmission shall meet or exceed the minimum specifications. In the event the transmission fails inspection, it shall be repaired or replaced. The transmission oil, filter, and oil pan gasket shall be replaced.

j. **BRAKE SYSTEM**

(1) Inspect in accordance with TM5-3810-305-24 to conform with inspection procedures to assure full conformance with this SOW.

(a) Inspect Brake Linkage, Hand Brake and pedal.

(b) Inspect parking brake for proper functioning.

(c) Inspect service brake.

(d) Inspect all brake lines for cracks and leaks.

(e) Inspect brake pads.

(f) Inspect hydraulic brake assembly system.

(g) Inspect mechanical brake system.

(2) PASS/FAIL. Repair/Replace any or all of the above components that do not meet operational standards of TM5-3810-305-24.

k. **TIRES, WHEELS**

(1) INSPECTION PROCEDURES. Inspect tire inflation. Inspect for cupping, chunking, cuts, and cracks.

(a) Inspect wheels for cracks, breaks, and damaged mounting holes.

(b) Wheels shall be free of cracks breaks, and damaged mounting holes. Front end alignment and toe-in-adjustment shall meet the standards prescribed in the technical manual. All wheels that do not meet these requirements shall be replaced.

(2) PASS/FAIL. Each tire must have 4/32 inch or more of tread remaining and be in good serviceable condition. All tires on a vehicle shall be matched to provide proper performance and approximately equal life. Tires shall not show evidence of cupping or chunking. Tires shall not have cuts or cracks greater than one inch in length, 1/8 inch wide. Tires shall not have cuts or breaks, regardless of length or width, which extend to the fabric, Rubber separation or bulges on tire side walls are not acceptable.

All tires that do not meet these requirements shall be replaced.

The above procedures for replacement can be found in TM5-3810-305-24P.

l. **STEERING SECTION**

(1) TEST PROCEDURES. Inspect steering pump, steer mode selector valve, control unit, emergency steer motor and pump, reservoir, and cap for leaks and proper function.

(a) Inspect all steering cylinder hoses for leaks.

(b) Inspect steering control unit.

(c) Inspect all steering tubing for leaks, cracks, kinks, or flat section.

(d) Inspect Steering hydraulic tank.

(e) Inspect steering wheel for cracks.

(f) Inspect steering selector valve.

(g) Inspect Steering pump.

NOTE: All steering cylinders shall be removed and new seal kits and springs installed 100 percent.

(2) PASS/FAIL. Repair/Replace the steering pump reservoir, and cap if leaking and not functioning properly. Replace steering fluid 100 percent.

No welding or straightening (hot or cold) shall be permitted on steering gear controls. Steering wheels with minor cracks 1/8 inch wide or less which do not extend to the steering wheel core may be repaired by filling with a non-shrinking epoxy and sanded smooth.

The above procedures for repair/replacement can be found in TM 5-3810-305-24.

m. **FRAME FENDER AND CAB**

(1) TEST/INSPECTION PROCEDURES. Check frame fender and decks and under body supports for deteriorated bushings, broken bolts, cracks, broken welds, and rust. Remove all insulation from cab/floor and inspect for corrosion. Inspect the following.

(a) Frame fender and cab.

(b) Upper structure

(c) Doors.

(d) Pintle hook.

(e) Upholstery and Seats.

(f) Mirrors

(g) Engine housing.

(h) Data plate and instruction holder.

(i) Inspect glass for breaks and cracks.

(j) Inspect windshield wiper for proper function.

(k) Inspect mirror bracket for security.

(l) Vehicle Air Filter Assembly.

(2) PASS/FAIL. Repair/Replace the above items and dents that exceed 7/16 of an inch.

The above procedures for repair/replacement can be found in TM5-3810-305-24.

n. **Vehicle Sheet Metal Components.**

Repair or replace damaged sheet metal panels, covers, boom rest, skirts, fenders, ladders, bumpers and other metal items as needed. Replace sheet metal panels where corrosion has penetrated panel. Functional test tool box hinges, sliding hood slides, stationary hood latches and mirror hardware. Repair/replace as needed. Replace/repair all broken brackets and braces. Repairs shall be in accordance with best commercial practices.

o. **Rust Proofing and Painting (Exterior/Interior)**

All vehicles shall be rust proofed as required. Rust proofing shall be in accordance with following procedures.

(1) Clean area with either steam or high pressure water to remove dirt and loosen corrosion.

(2) Treat affected (corroded) areas with phosphoric fog.

(3) Clean in accordance to procedure 1.

(4) Apply MIL-C-81309 TYPE I, a water displacing corrosion inhibitor, to the affected areas.

(5) Prime and paint per latest edition of TM 4750-15/1.

Procedures for corrosion prevention and control are in accordance with TM 3080-34.

All exterior surfaces of the Crane shall be painted with Chemical Agent Coating (CARC) paint. Paint color shall be Desert Sand or Green 383. Color of individual Crane will be identified by the Weapon System Manager and/or their representative(s) upon induction into the IROAN cycle.

All Crane cabs interiors shall be painted in the existing color. This paint shall be a lead and chromate free based paint .

p. **DATA PLATES AND DECALS.**

DATA PLATE. Each repaired Crane shall have an IROAN data plate affixed next to the existing data plate. The data plate shall meet the requirements of MIL-STD -130. Replace all data plates and decals that are missing and illegible. IROAN data plates shall be prepared by the Contractor and contain the following information:

VEHICLE SERIAL NO_____
REPAIRED IN ACCORDANCE WITH SOW 00-837-2-09166A-2/1.
CONTRACTOR_____
DATE_____

VEHICLE HOUR METER READING AT TIME OF IROAN_____
NOTE: Hour meters on vehicles rebuilt under provisions of this SOW shall not be turned back to zero.

RECORD JACKET: All major equipment or components serial numbers that are replaced during IROAN are to be identified by the Contractor to be recorded in the record jacket of the Cranes (This include engines, transmissions, etc.).
Information will list the Crane serial number, Name of equipment/component(s) replaced, serial number of deficiency equipment/component(s), serial number of replacement equipment/component(s), and if the equipment/component(s) is new or rebuilt.

3.3.3.**PHASE III - INSPECTION, TESTING AND ACCEPTANCE.**

a. Inspection, testing and acceptance of the Crane shall be conducted in accordance with , TM5-3810-305-10, TM5-3810-305-24, MCO P1262.2A and this SOW.

b. The Contractor shall be responsible for conducting required tests and shall ensure all necessary personnel are available to complete the final acceptance. Acceptance test shall be held at the Contractor's facility. Weapon System Manager and/or their representative(s) shall be given a minimum of two weeks notice piror to beginning acceptance testing. The test area shall be cleared of all equipment part, components, ect, not required for the test.

c. All Cranes IROANed under the provisions of this SOW shall be Load Tested and Condition Inspected as per MCO P11262.2A. A completed Condition Inspection Record and Load Test Certification shall be provided for insertion in the vehicle record jacket. A completed Condition Inspection Record and Load Test Certification shall be over packed with each vehicle. Condition Inspection Record can be found in MCO P11262.2A, Table 4-2, page 4-9 through 4-11.
Vehicle Boom Assembly shall be stenciled with one inch letters and in a location that is readily visible when the boom is fully retracted, that the equipment has been Load Test Certified and the date certified. Stencil shall be in a lusterless black paint. Stencil sample: Load Tested 01 OCT 00.

d. The Contractor shall be responsible for correcting any deficiencies identified during inspection/testing. Weapon System Manager and/or their representative(s) may require the Contractor to report tests or portions thereof, if the original tests fail to demonstrate compliance with this SOW.

e. Cranes shall be lubricated and greased in accordance with the vehicle lubrication chart contained within TM 09166A-10/1. All coolant and oil levels shall be full to proper levels.

f. Vehicle Markings. Registration numbers and other markings shall be applied in accordance with TM 4750-15/1 and MIL-STD-642 . Lifting and tie down attachments shall be identified with one inch letters indicating "SLING POINT" or "TIE DOWN."

3.3.4. **PHASE IV - PACKAGING HANDLING STORAGE AND TRANSPORTATION (PHS&T).**

a. The Contactor shall be responsible for preservation and packaging of items being repaired under the terms of this statement of work. Items scheduled for long term storage shall be Level A in accordance with ATPD-2241. Items being prepared for domestic shipment, immediate use, and/or shipment to overseas destinations with the exception of Maritime Prepositioned Forces (MPF), shall be preserved to Level B, Drive-on/Drive-off. Items being prepared for overseas shipment shall have a label affixed which reads, "NOT FOR WEATHER DECK STOWAGE." Cranes scheduled for shipment to MPS shall be Level B, MPS Modified Drive Away.

b. The Terms Drive-on/Drive-off and MPF Modified Drive Away are defined as follows:

(1) Drive-on/Drive-off: Batteries will be hot and disconnected from vehicle electrical system. Terminals and leads will be taped. Fuel tank will be filled ¼ full. The air intake system, exhaust and brake systems, drive-train and gauges are to be depreserved.

(2) MPS Modified Drive Away: Batteries shall be hot and connected to vehicle electrical system. Fuel tank shall be filled ¾ full of JP5. The air intake system, exhaust and brake systems, drive-train and gauges are to be depreserved. Fire extinguisher bracket and seats (all) shall be installed.

c. Marking shall be in accordance with MIL-STD-129.

d. The Marine Corps will provide the contractor with shipping address(es) for delivery of the repaired equipment. The Contractor shall be responsible for arranging for shipment of the equipment to the pre-designed site(s). The Marine Corps will be responsible for transportation costs associated with shipping the subject equipment to and from the contractor.

3.4 **CONFIGURATION MANAGEMENT**

3.4.1 **CONFIGURATION STATUS ACCOUNTING (CSA)**

a. The Contractor shall determine the application status of approved configuration changes by visual inspections to the extent possible. The government will identify the configuration changes to be inspected by furnishing a Configuration Checklist (Appendix C) to the Contractor. The Contractor shall use one checklist for each Crane to record the inspection findings along with other required data.

b. The Contractor shall record serial numbers of the assemblies listed on the Configuration Checklist. The Contractor shall record the information on the same form that was used to record the application status of configuration changes.

3.4.2 **CONFIGURATION CONTROL.**

The Contractor shall apply configuration control to established baseline configuration item. Deviations from this established baseline configuration will not be allowed, without the written approval of the Weapon System/Equipment Manager (Code 837-2). If it is necessary to temporarily depart from the Authorized configuration, the Contractor shall prepare and submit a Request for Deviation or Request for Waiver. MIL-STD-973 (paragraphs 5.4.3 and 5.4.4 and Appendix E) may be used as guidance.

3.5 **GOVERNMENT FURNISHED EQUIPMENT (GFE)ACCOUNTABILITY/ GOVERNMENT FURNISHED MATERIEL (GFM).**
GFE is government owned equipment authorized by contract for use by a commercial/ government contractor. It is neither consumed during production nor incorporated into any product. GFM is materiel furnished to a contractor that will be consumed during the course of production or incorporated into product being manufactured/remanufactured under a contract/ statement of work. In the event the Marine Corps does have GFE/GFM requirements, the Management Control Activity (MCA/G316-2), Marine Corps Logistics Bases, Albany, Georgia, will coordinate required GFE and will maintain a central control on Marine Corps assets in the Contractor's possession. The MCA will forward a GFE Accountability agreement to the Contractor Facility for signature to establish a chain of custody and property responsibilities for Marine Corps assets. The Contractor shall report receipt of all GFM and report consumption of GFM to the MCA.

3.6 **CONTRACTOR FURNISHED MATERIEL (CFM).** The Marine Corps has adopted the Navy's procedures regarding Contractor Furnished Materiel (NAVICPINST 4491.2A). In the event that Contractor Furnished Materiel is required for repair parts, the contractor shall requisition through the DOD Supply System. DOD 4000.25-1-M, (MILSTRIP) Chapter 11 authorizes contractors to requisition through the DOD Supply System.

3.7 **QUALITY ASSURANCE PROVISIONS**

The performances of the Contractor and the quality of work delivered, material provided and documents written shall be subject to in-process review and inspection by the Weapon System Manager and/or their representative(s) during contract performance. Inspection may be accomplished at any work location. Authorized Weapon System Manager representative(s) shall be permitted to observe the work/task accomplishment or to conduct inspections at all reasonable hours within contractor normal working hours. Acceptance tests shall be held in-plant. Inspection by Weapon System Manager and/or their representative(s) of all acceptance tests plans, materials and associated lists furnished hereunder does not relieve the Contractor from any responsibility regarding defects or other failures to meet contract requirements which may be disclosed prior to final acceptance.
The Contractor shall provide and maintain a Quality System that as a minimum, adheres to the requirements of ANSI/ISO/ASQC Q9002-1994 Quality System Model for Quality Assurance in Production, Installation, and Servicing. The Contractors work shall be subject to in-process reviews and inspections for compliance with Quality Systems by Weapon System Manager

and/or their representative(s). Noncompliance with procedures resulting in degraded quality of work may result in a stop-work order requiring action by the Contractor to correct the work performed and to enforce compliance with quality assurance procedures or face contract termination. Notwithstanding such Weapon System Manager and/or their representative's inspection, it shall be the Contractor responsibility to ensure that the entire system meets the performance requirements delineated and addressed in the Cranes TM5 3810-305-24 and this SOW.

Quality assurance operations performed by the Contractor shall be subject to the Weapon System Manager and/or their representative(s) verification at any time. The Weapon System Manager and/or their representative(s) verifications can include, but shall not be limited in any matter, to the following:

a. Inspection of materials, products, assemblies, and documentation to assess compliance with quality standards.

b. Surveillance of operations to determine that quality assurance, practices, methods, and procedures are being properly applied.

c. Inspections of deliverable products to assure compliance with all requirements of the Crane, this SOW, and applicable documents used herein.

d. Failure of the repair facility to promptly correct deficiencies discovered, shall be a reason for suspension of acceptance until corrective action has been made.

3.8 ACCEPTANCE

The performance of the contractor and the quality of work delivered, including all equipment furnished and documentation written or compiled, shall be subject to in process review and inspection during performance. Inspection may be accomplished in plant or at any work site or location, and Marine/Corps representatives shall be permitted to observe the work or to conduct inspection at all reasonable hours. Final inspection and acceptance testing shall be conducted at the contractor. Finally acceptance shall be conducted on 100 percent of items to verify that the units meet all requirements.

Acceptance testing. The Crane IROANED under the provisions of this SOW shall be accomplished in accordance with TM5-3810-305-24, MCO P1262.2A, and this SOW.

3.9 REJECTION

Failure to comply with any of the specified requirements listed herein shall be reason for rejection by the Weapon System Manager and/or their representative(s). The Contractor at no additional cost to the Marine Corps provide the following:

a. Develop an approach for modification or correction of all deficiencies.

b. On approval of a documented approach, the Contractor shall correct the deficiencies and repeat verification until acceptable compliance with acceptance test procedures is demonstrated.

4.0 **REPORTS**. The following reports shall be provided to the Weapon System Manager and/or their representative. Reports shall be forward to: ATTN: Weapon System Manager (Code 837-2), 814 Radford Blvd, Marine Corps Logistic Bases, Albany GA., 31704-1128.

4.1 Pre-Induction Checklist. The Contractor shall complete the Pre-Induction Checklist (Appendix A) for each Crane IROANed. This document shall be available during final acceptance testing. One copy of each document shall be provided to the Weapon System Manager and/or their representative(s) after final acceptance of the Crane, or upon request.

4.2 Final Inspection Checklist. The Contractor shall complete the Final Inspection Checklist (Appendix B) for each Crane IROANed. This document shall be available during final acceptance testing. One copy of each document shall be provided to the Weapon System Manager/or their representative(s) after final acceptance of the Crane, or upon request.

4.3 Configuration Checklist. The Contractor shall complete the Configuration Checklist (Appendix C) for each Crane IROANed. This document shall be available during final acceptance testing. One copy of each document shall be provided to The Weapon System Manager and/or their representative(s) after final acceptance of the Crane, or upon request.

4.4 Load Test Certification/Condition Inspection Report. A completed Load Test Certification and Condition Inspection Record shall be over packed with each Crane IROANed. Condition Inspection Record in found in MCO P11262.2A. All inspection items listed in this report may not apply to the Crane. Inspections items that do apply shall be functional and pass inspection requirements. Mark inspection items that do not apply as N/A.

PRE-INDUCTION CHECKLIST
CRANE, WHEEL MOUNTED, HYDRAULIC, LIGHT 7 ½ TON

Vehicle Serial Number: _____
Vehicle Hours: _____
Use this sheet to record Operational Checkout results. Perform the operational checks before installing any test equipment.

CRANE, WHEEL MOUNTED, 7 ½ TON **NSN 3810-01-165-0646**	**SAT**	**ISSING**	**SERVICE**	**ADJUST**	**REPAIR**	**REPLACED**	**MODIFY**	**REMARKS**
1. **Engine Assembly**								
Condition								
Operation								
Leakage								
Mounting								
Screws								
Nuts								
Washers								
Paint								
Spec Conformance								
Coverage								
Lubrication								
Application and type								
Oil Analysis Results								
Pass _____ Fail _____								
2. **Transmission Assembly**								
Condition								
Operation								
Mounting								
Leakage								
Shift Control Assembly								
Condition								
Operation								
Paint								
Spec Conformance								
Coverage								
Oil Analysis Results								
Pass _____ Fail _____								

3. **Fuel System** Condition Leakage Fittings **Mounting** Clamps and Bolts **Components** Injector and Injector Lines Shutoff Solenoid Fuel Pump Fuel Tank Fuel Supply Line Water Separators Cold Start Devise Accelerator Pedal and Linkage Operation								
4. **Hydraulic System** Condition Operation Leakage Hoses and Lines **System Requires Draining or Flushing?**								
5. **Boom Assembly** Condition Operation Leakage Hoses and Lines Mounting **Components** 1. Two Sectional Boom Assy 2. Boom Hoist Cylinder 3. Boom Telescope Cylinder 4. Boom Hoist and Telescope Control Valves 5. Anti-Two Block Assy **Boom Adjustment and Alignment.** **Meets MCO P11262.2A Requirements?**								

6. **Load Hoist Winch Assy.** Condition Operation Leakage Mounting Hoses and Lines **Components** 1. Winch Motor 2. Hoist Winch 3. Hoist Winch Control Assy. 4. Wire Rope Assembly **Meets MCO P11262.2A Requirements?**								
7. **Boom Swing System** Condition Operation Leakage Hoses and Lines **Components** 1. Swing Motor 2. Swing Valves and Components 3. Slewing Ring 4. Swing Control Assembly 5. Rotary Manifold								
8. **Outriggers** Condition Operation Leakage Hoses and Lines **Components** 1. Cylinders 2. Check Valves 3. Control Valves and Assemblies **Meets MCO P11262.2A Requirements?**								
9. **Engine Cooling System** Condition Leakage Clamps and Fittings								

Components 1. Radiator 2. Water Inlet Manifold 3. Oil Cooler 4. Fan Assembly 5. Fan Shroud 6. Water Pump								
10.**Vehicle Electrical System** Condition Operation Mounting **Components** 1. Alternator 2. Starting Motor and Solenoid 3. Cab Instrument Panel 4. Switches 5. Circuit Breakers/Fuses 6. Front, Rear, and Vehicle Work Lights 7. Sending Units 8. Horn and Backup Alarm 9. Batteries 10. Electrical System Wiring Harnesses 11. Axle Centering Light Switch Assembly 12. STE/ICE DCA Connector/Resistor Module								
11. **Vehicle Axles** Condition Operation Leakage **Components** 1. Front and Rear Axles 2. Front and Rear Differentials 3. Tie Rods 4. Pivot and Spindle Assemblics.								
12. **Drive Shafts** Condition								

Operation								
13. **Vehicle Brake System** Condition Operation Leakage Hoses and Lines **Components** 1. Brake Linkage, Hand Brake and Pedal 2. Parking Brake 3. Service Brakes								
14. **Tires, Wheels** Condition Mounting								
15. **Vehicle Steering** Condition Operation Leakage Hoses and Lines **Components** 1. Steering Column 2. Control Unit 3. Selector Valve 4. Steering pump 5. Steering Cylinders								
16. **Cab Assembly** Condition Operation **Subassemblies** 1. Door and Door Hardware 2.Vehicle Glass 3. Operator Seat 4. Rear View Mirror 5. Windshield Wiper and Washer Assemblies								
17.**Sheet Metal Components** Condition Mounting **Components** 1. Panel and Covers 2. Fenders 3. Pintle Hook 4. Engine Housing								

5. Mirror Hardware 6. Battery Box and Cover 7. Tool Box and Cover								
18. **Air Cleaner Assy** Condition Mounting Hoses								
19. **Vehicle Paint** Condition Coverage								
20. **Vehicle Data Plates and Decals** Condition Mounting								

ADDITIONAL REMARKS:

APPENDIX A

FINAL INSPECTION CHECKLIST
CRANE, WHEEL MOUNTED, HYDRAULIC, LIGHT 7 ½ TON

Vehicle Serial Number _____
Vehicle Hours: _____

CRANE, WHEEL MOUNTED, 7 ½ TON	**SAT**	**SERVICE**	**TESTED**	**LUBRICATED**	**UNSAT**	**REMARKS**
1. **Engine Assembly** Condition Operation Leakage **Mounting** Screws Washers Nuts **Paint** Spec. Conformance Coverage **Lubrication** Application and Type Level **Oil filters Replaced 100 Per Cent? YES _____ NO _____**						
2. **Transmission Assembly** Condition Operation Leakage Mounting						
3. **Fuel System** Condition Operation Leakage **Mounting** Clamps and Bolts						

Components 1. Injector and Injector Lines 2. Fuel Pump 3. Fuel Tank 4. Fuel Supply Lines and Hoses 5. Water Separators 6. Cold Start Assembly 7. Accelerator Pedal and Linkage Operation **Fuel Filters Replaced 100 Per Cent? YES ___NO ___**						
4 Hydraulic System Condition Operation Leakage Hoses and Lines **Hydraulic Filters Replaced 100 Per Cent?** **YES _____ NO_____**						
5. **Boom Assembly** Condition Operation Hoses and Lines Mounting **Components** 1. Two Sectional Boom Assembly 2. Boom Hoist Cylinder 3. Boom Telescope Cylinder 4. Boom Hoist and Telescope Control Valves 5. Anti-Two Block Assy. 6. Boom Adjustment and Alignment 8. Hook Block Assembly 9. Boom Sheaves and Pins **Meets MCO P11262.2A Requirements?** **YES _____ NO _____**						

6. **Load Hoist Winch Assy.** Condition Operation Leakage Mounting **Components** 1. Winch Motor 2. Hoist Winch 3. Hoist Winch Control Assembly 4. Wire Rope Assembly **Meets MCO P11262.2A** **YES _____ NO ____**						
7. **Boom Swing System** Condition Operation Leakage Hoses and Lines **Components** 1. Swing Motor 2. Swing Valves and Components 3. Slewing Ring 4. Swing Control Assembly 5. Rotary Manifold						
8. **Outriggers** Condition Operation Leakage Hoses and Lines **Components** 1. Cylinders 2. Check Valves 3. Control Valves and Assemblies **Meets MCO P11262.2A Requirements?** **YES ____ NO _____**						
9. **Engine Cooling System** Condition Leakage Clamps and Fittings						

Components 1. Radiator 2. Water Inlet Manifolds 3. Oil Cooler 4. Fan Assembly 5. Fan shroud 6. Water Pump						
10.**Vehicle Electrical System** Condition Operation Mounting **Components** 1. Alternator 2. Starting Motor and Solenoid 3. Cab Instrument Panel 4. Switches 5. Circuit Breaker/Fuses 6. Front, Rear, and work Lights 7. Sending Units 8. Horn and Backup Alarm 9. Batteries 10. Electrical System Wiring Harnesses 11. Axle Centering Light Switch Assy. 12. STE/ICE DCA Connector/Resistor Module						
11. **Vehicle Axles** Condition Operation Leakage Mounting **Components** 1. Front and Rear Axles 2. Front and Rear differentials 3. Tie Rod 4. Pivot and Spindle Assemblies						

12. **Drive Shafts** Condition Operation						
13. **Vehicle Brake System** Condition Operation Leakage Hoses and Lines **Components** 1. Brake Linkage, Hand Brake and Pedal 2. Parking Brake 3. Service Brakes						
14. **Tire, Wheels** Condition Mounting						
15. **Vehicle Steering** Condition Operation Leakage Hoses and Lines **Components** 1. Steering Column 2. Control Unit 3. Selector Valve 4. Steering Pump 5. Steering Cylinders						
16. **Cab Assembly** Condition Operation **Components** 1. Door and Door Hardware 2. Vehicle Glass 3. Operators Seat 4. Rear View Mirrors 5. Windshield Wiper and Washer Assembly						
17. **Sheet Metal Components** Condition Mounting **Components** 1, Panels and Covers						

2. Fenders 3. Pintle Hook Assy 4. Engine Housing (Hood) 5. Engine Air Cleaner Assembly 6. Mirror Mounting Hardware 7. Battery Box and Cover 8. Tool Box and Cover **Air Filters Replaced 100 Pre Cent YES ___ NO ___**						
18. **Vehicle Paint** Coverage Condition Spec. Conformance						
19. **Vehicle Data Plates/Decals** Condition Mounting **IROAN Data Installed?** **YES ____ NO ____**						
20. **Vehicle Load Testing** Condition Marking **Vehicle Load Tested in Accordance with MCO P11262.2A** **YES ____ NO _____** **Load Test Date Annotated on Boom in Accordance with Provisions of This SOW?** **YES _____ NO _____** **Condition Inspection Report Provided in Accordance with Provisions of This SOW?** **YES _____ NO ____**						

ADDITIONAL REMARKS:

CONFIGURATION INSPECTION CHECK SHEET
7 ½ TON CRANE

IDENTIFICATION NUMBER	TAM NUMBER
Vehicle registration Number	
Vehicle Serial Number	
Hours at Inspection	
Miles at Inspection	
IROAN Date	
Hours at IROAN	
Miles at IROAN	
Engineering Change Plans (ECP)	
SL-4	
Technical Manuals (TM)	

SECONDARY REPAIRABLE DATA

ITEM	SERIAL NUMBER
Engine	
Transmission	
Drive Axles	

CONTRACT DATA REQUIREMENTS LIST

(1 Data Item)

Form Approved
OMB No. 0704-0188

The public reporting burden for this collection of information is estimated to average 110 hours per response, including the time for reviewing instructions, searching existing data sources, gathering and maintaining the data needed, and completing and reviewing the collection of information. Send comments regarding this burden estimate or any other aspect of this collection of information, including suggestions for reducing the burden, to Department of Defense, Washington Headquarters Services, Directorate for Information Operations and Reports (0701-0188), 1215 Jefferson Davis Highway, Suite 1204, Arlington, VA 22202-4302. Respondents should be aware that notwithstanding any other provision of law, no person shall be subject to any penalty for failing to comply with a collection of information if it does not display a currently valid OMB control number. Please DO NOT RETURN your form to the above address. Send completed form to the Government Issuing Contracting Officer for the Contract/PR No. listed in Block E.

A. CONTRACT LINE ITEM NO.	B. EXHIBIT	C. CATEGORY: TDP ____ TM ____ OTHER X
D. SYSTEM/ITEM: Crane, Wheel Mted, Hydraulic, Light	E. CONTRACT/PR NO.	F. CONTRACTOR

1. DATA ITEM NO.	2. TITLE OF DATA ITEM	3. SUBTITLE	17. PRICE GROUP
A001	Request For Deviation	Configuration Management	

4. AUTHORITY (Data Acquisition Document No.)	5. CONTRACT REFERENCE	6. REQUIRING OFFICE	18. ESTIMATED TOTAL PRICE
DI-CMAN-80640B	SOW 3.4.2	MCLBA (825)	

7. DD 250 REQ	8. DIST STATEMENT REQUIRED	10. FREQUENCY	12. DATE OF FIRST SUBMISSION
LT		ASREQ	SEE BLK 16
9. APP CODE		**11. AS OF DATE**	**13. DATE OF SUBSEQUENT SUBMISSION**
	A		

16. REMARKS

Blk 4 - Contractor format is authorized.

Blks 10 & 12 - RFDs shall be submitted to obtain authorization to deliver nonconforming material which does not meet prescribed configuration documentation.

RFDs will be reviewed and disposition determined within 30 calendar days upon receipt by the Government.

RFDs shall be transmitted via E-Mail to the following address: mbmatcomconfigmngmnt@matcom.usmc.mil

Distribution Statement A: Approved for public release; distribution is unlimited.

14. DISTRIBUTION

a. ADDRESSEE	b. COPIES: Draft	Final: Reg	Final: Repro
MCLBA (825-2)	0	1	0
15. TOTAL →	0	1	0

G. PREPARED BY	H. DATE	I. APPROVED BY	J. DATE
[signature]	10-6-99	[signature]	10-13-99

CONTRACT DATA REQUIREMENTS LIST

(1 Data Item)

Form Approved
OMB No. 0704-0188

The public reporting burden for this collection of information is estimated to average 110 hours per response, including the time for reviewing instructions, searching existing data sources, gathering and maintaining the data needed, and completing and reviewing the collection of information. Send comments regarding this burden estimate or any other aspect of this collection of information, including suggestions for reducing the burden, to Department of Defense, Washington Headquarters Services, Directorate for Information Operations and Reports (0701-0188), 1215 Jefferson Davis Highway, Suite 1204, Arlington, VA 22202-4302. Respondents should be aware that notwithstanding any other provision of law, no person shall be subject to any penalty for failing to comply with a collection of information if it does not display a currently valid OMB control number. Please DO NOT RETURN your form to the above address. Send completed form to the Government Issuing Contracting Officer for the Contract/PR No. listed in Block E.

A. CONTRACT LINE ITEM NO.	B. EXHIBIT	C. CATEGORY: TDP ____ TM ____ OTHER X
D. SYSTEM/ITEM: Crane, Wheel Mted, Hydraulic, Light	E. CONTRACT/PR NO.	F. CONTRACTOR

1. DATA ITEM NO.	2. TITLE OF DATA ITEM	3. SUBTITLE	17. PRICE GROUP
A002	Request For Waiver	Configuration Management	
4. AUTHORITY *(Data Acquisition Document No.)*	**5. CONTRACT REFERENCE**	**6. REQUIRING OFFICE**	**18. ESTIMATED TOTAL PRICE**
DI-CMAN-80641B	SOW 3.4.2	MCLBA (825)	

7. DD 250 REQ	8. DIST STATEMENT REQUIRED	10. FREQUENCY	12. DATE OF FIRST SUBMISSION
LT		ASREQ	SEE BLK 16
9. APP CODE		**11. AS OF DATE**	**13. DATE OF SUBSEQUENT SUBMISSION**
	A		

16. REMARKS

Blk 4 - Contractor format is authorized.

Blks 10 & 12 - RFWs shall be submitted to obtain authorization to deliver nonconforming material which does not meet prescribed configuration documentation.

RFWs will be reviewed and disposition determined within 30 calendar days upon receipt by the Government.

RFWs shall be transmitted via E-Mail to the following address: mbmatcomconfigmngmnt@matcom.usmc.mil

Distribution Statement A: Approved for public release; distribution is unlimited.

14. DISTRIBUTION

a. ADDRESSEE	b. COPIES: Draft	Final: Reg	Final: Repro
MCLBA (825-2)	0	1	0
15. TOTAL →	0	1	0

G. PREPARED BY	H. DATE	I. APPROVED BY	J. DATE
[signature]	10-6-99	[signature]	10-13-99