STATEMENT OF WORK

FOR THE

REBUILD OF

ENGINE, DIESEL

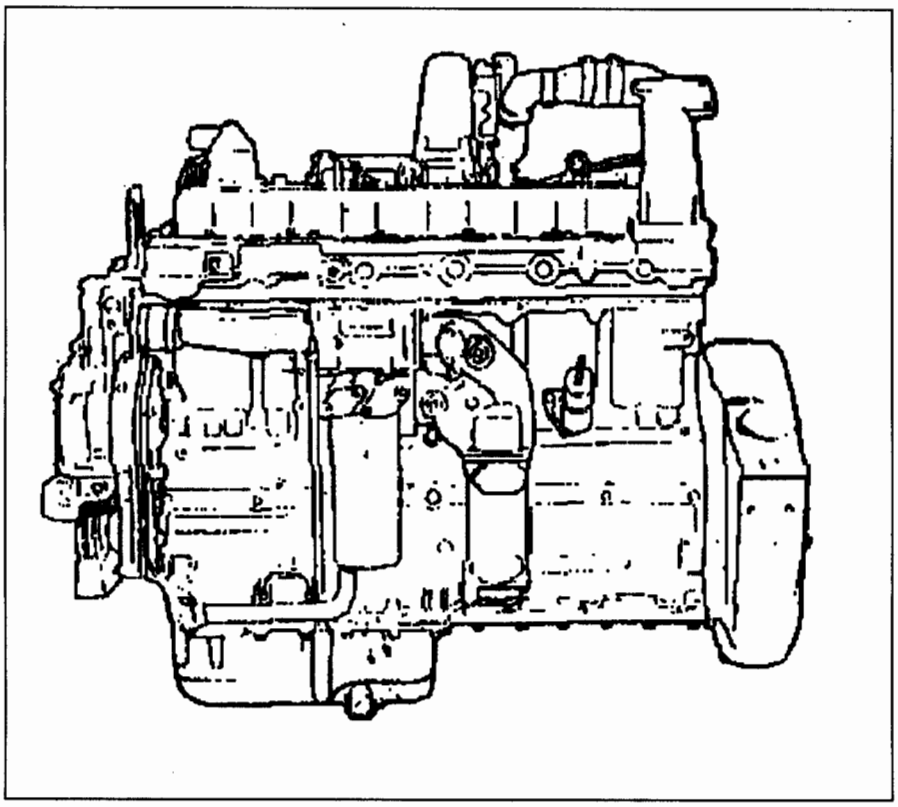

NSN 2815-01-161-4944

TABLE OF CONTENTS

Paragraph/Contents		Page
1.0	SCOPE	1
1.1	Background	1
2.0	APPLICABLE DOCUMENTS	1
2.1	Military Standards	1
2.2	Other Government Documents and Publications	1
2.3	Industry Standards	2
3.0	REQUIREMENTS	2
3.1	General Tasks	2
3.2	Configuration Control	3
3.3	Government Furnish Equipment (GFE)/Government Furnished Materiel (GFM)	3
3.4	Contractor Furnished Materiel (CFM)	3
3.5	Quality Assurance Provisions	3
3.6	Packaging, Handling, Storage and Transportation (PHS&T)	4

STATEMENT OF WORK
FOR REBUILD OF ENGINE, DIESEL
NSN 2815-01-161-4944, ID 8A131B

1.0 SCOPE. This Statement of Work (SOW) establishes, sets forth tasks and identifies the work efforts that shall be performed by the Contractor (for the purposes of this SOW, Contractor is defined as the commercial or government entity performing the rebuild) to rebuild the Engine, Diesel, NSN 2815-01-161-4944, hereafter to be known as the Engine Diesel. This document contains requirements restore the Engine, Diesel to Condition Code "A". Condition Code A is defined as Serviceable/ Issuable without qualification, new, used, repaired or reconditioned material which is serviceable and issuable to all customers without limitation or restriction including material with more than six months shelf-life remaining." The rebuild of the Engine, Diesel is in support of the Tractor, Medium, Full Tracked, Model D7G, NSN 2410-01-155-1588.

Questions related to this SOW should be addressed to Marine Corps Systems Command (MCSC), Code PMM152, Building 3700, Rm 310W, 814 Radford Blvd., Suite 20343, Albany GA 31704-0343, commercial telephone number (229) 639-6983, DSN 567-6983.

1.1 Background. Rebuild is defined as "that maintenance technique to restore an item to a standard as near as possible to original or new condition in appearance, performance, and life expectancy. This is accomplished through a maintenance technique or complete disassembly of the item, inspection of all parts or components, repair or replacement of worn or unserviceable parts/elements using original manufacturing tolerances and/or specifications and subsequent reassembly of the item".

2.0 APPLICABLE DOCUMENTS. The following documents form a part of this SOW to the extent specified. Unless otherwise specified, the issues of these documents are those listed in the Defense Index of Specifications and Standards (DoDISS) and supplement thereto which are in effect on the date of solicitation. In the event of conflict between the documents referenced herein and the contents of this SOW, the content of the SOW shall be the superseding requirement.

2.1 Military Standards

MIL-STD-129	DoD Standard Practice: Military Marking for Shipment and Storage
MIL-STD-130	U.S. Military Property, Identification Marking of

2.2 Other Government Documents And Publications

DoD 4000.25-1-M	Military Standard Requisitioning and Issue Procedures (MILSTRIP)
RS 08757A-50	Rebuild Standard, Tractor, medium, Full Tracked, Model D7G

SL-4-08757A	Repair Parts List for Tractor, Medium, Full Tracked, Model D7G
ATPD 2232	Engines: Preparation for Storage and Shipment of

Military Handbooks (For Guidance)

MIL-HDBK-61	Configuration Management Guidance

2.3 Industry Standards

ANSI/ISO/ASQC Q9001-2000	Quality Management Systems – Requirements

Industry Standards (For Guidance)

ANSI/EIA-649	National Consensus Standards for Configuration Management

Copies of Military Standards and Specifications are available from the DOD Single Stock Point, Document Automation and Production Service, Building 4/D, 700 Robbins Avenue, Philadelphia, PA 19111-5094, commercial telephone number (215) 697-2179 or DSN 442-2179, or on the Internet at http://www.dodssp.daps.mil. Copies of other government documents and publications required by contractors in connection with specific SOW requirements shall be obtained through the Contracting Officer: Commanding General, Attn Contracts Department (Code 891), P. O. Drawer 43019, 814 Radford Blvd., Marine Corps Logistics Command, Albany, GA 31704-3019, commercial telephone number (229) 639-6761 or DSN 567-6761. Copies of engineering drawings, if applicable, shall be obtained from Supply Chain Management Center, Attn: Code 566-1A, 814 Radford Blvd., STE 20320, Albany, Georgia 31704-0320, commercial telephone number (229) 639-6476 or DSN 567-6476.

3.0 REQUIREMENTS

3.1 General Tasks. In fulfilling the specified requirements, the contractor shall:

a. Perform a complete rebuild of the Engine, Diesel in accordance with Rebuild Standard (RS) 08757A-50. Engine parts list is contained within SL-4-08757A.

b. Provide materials, labor, facilities, missing parts, and repair parts necessary to inspect, diagnose, restore, and test the Engine, Diesel. Upon completion of rebuild, the Engine Diesel shall be Condition Code "A".

c. Marine Corps Systems Command (MCSC), Code PMM 152, Albany GA representative(s), shall witness in process and final on-site testing.

d. The contractor shall be responsible for all structural, electrical and mechanical requirements associated with the rebuild of the Engine, Diesel.

e. Each rebuilt Engine, Diesel shall have a Rebuild data plate affixed next to the existing data plate. The data plate shall meet the requirements of MIL-STD-130. Replace all data plates and decals that are missing and illegible. Rebuild data plates shall be prepared by the Contractor and contain the following information:

ENGINE SERIAL NO_____
REPAIRED IN ACCORDANCE WITH SOW-07-PMM152-8A131B-1/1
CONTRACTOR_____DATE_____

3.2 Configuration Control. The Engine, Diesel baseline configuration has been established in SL-4-08757A. The contractor shall not implement configuration changes to an item's documented performance or design characteristics without prior written authorization. If it is necessary to temporarily depart from the authorized configuration, the contractor shall prepare and submit a Request For Deviation. MIL-HDBK-61 and ANSI/EIA-649 provide guidance for preparing this configuration control document.

3.3 Government Furnished Equipment (GFE) Accountability/Government Furnished Materiel (GFM). The Management Control Activity (MCA)(Code 581-1B) will coordinate GFE/GFM requests and maintain a central control system on all government owned assets in the contractor's possession. The MCA will forward a GFE Accountability Agreement to the contractor for signature on an annual basis to establish a chain of custody and identify property responsibilities for Marine Corps assets. The contractor is to acknowledge receipt of GFM to the MCA within 15 days of receipt. This can be done by mailing a copy of the DD1348 to Materiel and Distribution Management Department, Distribution Management Branch, Management Control Activity (Code 581-1B), 814 Radford Blvd., STE 20320, Albany GA 31704-0320, or faxing a copy to commercial telephone number (229) 639-5498 or DSN 567-5498.

3.4 Contractor Furnished Materiel (CFM). The Contractor may requisition materiel as required in the performance of the SOW through the DoD Supply System. DoD 4000.25-1-M (MILSTRIP), Chapter 11, provides guidance to contractors on the requisitioning process. The contractor's decision to utilize CFM procured from the DoD Supply System shall be based upon cost effectiveness, availability of materiel and the required completion/delivery date.

3.5 Quality Assurance Provisions. The performance of the Contractor and the quality of work delivered, material provided and documents written shall be subject to in-process review and inspection by MCSC, Code PMM 152, representative(s) during contract performance. Inspection may be accomplished at any work location. Authorized MCSC, Code PMM 152, Albany, Georgia representative(s) shall be permitted to observe the work/task accomplishment or to conduct inspections at all reasonable hours within contractor normal working hours. Acceptance tests shall be held in-plant. Inspection by MCSC, Code PMM 152, Albany, Georgia representative(s) of all acceptance tests plans, materials and associated lists furnished hereunder does not relieve the contractor from any responsibility regarding defects or other failures to meet contract requirements which may be disclosed prior to final acceptance.

The contractor shall provide and maintain a Quality System that, as a minimum, adheres to the requirements of ANSI/ISO/ASQC Q9001-2000 Quality Management Systems – Requirements. The contractor work shall be subject to in-process reviews and inspections for compliance with Quality Systems by MCSC, Code PMM 152, Albany, Georgia representative(s). Noncompliance with procedures resulting in degraded quality of work may result in a stop-work order requiring action by the contractor to correct the work performed and to enforce compliance with quality assurance procedures or face contract termination. Notwithstanding such, MCSC, Code PMM 152, Albany, Georgia representative inspection, it shall be the contractor's responsibility to ensure that the entire system meets the performance requirements delineated and addressed in RS 08757A-50 and this SOW.

Quality assurance operations performed by the contractor shall be subject to the MCSC, Code PMM 152 representative (s) verification at any time. MCSC, Code PMM 152, Albany, Georgia representative(s) verifications can include, but shall not be limited in any matter, to the following:

a. Inspection of materials, products, assemblies, and documentation to assess compliance with quality standards.

b. Surveillance of operations to determine that quality assurance, practices, methods, and procedures are being properly applied.

c. Inspections of deliverable products to assure compliance with all requirements of RS 08757A-50, this SOW, and applicable documents used herein.

3.6 Phase IV - Packaging Handling Storage And Transportation (PHS&T)

a. The Contactor shall be responsible for preservation and packaging of item(s) being rebuilt under the terms of this statement of work. Items scheduled for long-term storage or shipment to overseas destinations shall be in accordance with the Level "A" requirements of ATPD 2232, TYPE IV. Items scheduled for immediate use or short term storage shall be in accordance with the Level B requirements.

b. Marking for shipment and storage shall be in accordance with MIL-STD-129.

c. The Marine Corps will provide the contractor with shipping addresses for delivery of rebuilt equipment. The Contractor shall be responsible for arranging for shipment of the equipment to the pre-designated site(s). The Marine Corps will be responsible for transportation costs associated with shipping the subject equipment to and from the contractor.

CONTRACT DATA REQUIREMENTS LIST

(1 Data Item)

Form Approved
OMB No. 0704-0188

The public reporting burden for this collection of information is estimated to average 110 hours per response, including the time for reviewing instructions, searching existing data sources, gathering and maintaining the data needed, and completing and reviewing the collection of information. Send comments regarding this burden estimate or any other aspect of this collection of information, including suggestions for reducing the burden, to Department of Defense, Washington Headquarters Services, Directorate for Information Operations and Reports (0701-0188), 1215 Jefferson Davis Highway, Suite 1204, Arlington, VA 22202-4302. Respondents should be aware that notwithstanding any other provision of law, no person shall be subject to any penalty for failing to comply with a collection of information if it does not display a currently valid OMB control number. Please DO NOT RETURN your form to the above address. Send completed form to the Government Issuing Contracting Officer for the Contract/PR No. listed in Block E.

A. CONTRACT LINE ITEM NO.	B. EXHIBIT	C. CATEGORY: TDP ____ TM ____ OTHER X
D. SYSTEM/ITEM: Engine, Diesel	E. CONTRACT/PR NO.	F. CONTRACTOR

1. DATA ITEM NO.	2. TITLE OF DATA ITEM	3. SUBTITLE	17. PRICE GROUP
A001	Request For Deviation	Configuration Management	

4. AUTHORITY *(Data Acquisition Document No.)*	5. CONTRACT REFERENCE	6. REQUIRING OFFICE	18. ESTIMATED TOTAL PRICE
DI-CMAN-80640C	SOW 3.2	MCLBA (566)	

7. DD 250 REQ	9. DIST STATEMENT REQUIRED	10. FREQUENCY	12. DATE OF FIRST SUBMISSION
LT	A	ASREQ	See Blk 16
8. APP CODE		**11. AS OF DATE**	**13. DATE OF SUBSEQUENT SUBMISSION**
A			

16. REMARKS

Blk 4 - Contractor format submitted in .pdf or .doc format is authorized.

Blks 10 & 12 - RFDs shall be submitted to obtain authorization to deliver nonconforming material which does not meet prescribed configuration documentation.

RFDs will be reviewed and disposition determined within 20 working days upon receipt by the Government.

Block 14: RFDs shall be transmitted via E-Mail to the following address: mbmatcomconfigmngmnt@logcom.usmc.mil.

Distribution Statement A: Approved for Public Release; Distribution is Unlimited.

14. DISTRIBUTION

a. ADDRESSEE	b. COPIES: Draft	Final: Reg	Final: Repro
MCLBA (566-1)	0	1	0
15. TOTAL →	0	1	0

G. PREPARED BY	H. DATE	I. APPROVED BY	J. DATE
[signature]	1-23-04	James Adams	4023