STATEMENT
OF
WORK (SOW)

TRAILER MOUNTED ARC WELDING MACHINE
MODEL DCC-353-P

INSPECT AND REPAIR ONLY AS NECESSARY (IR0AN)

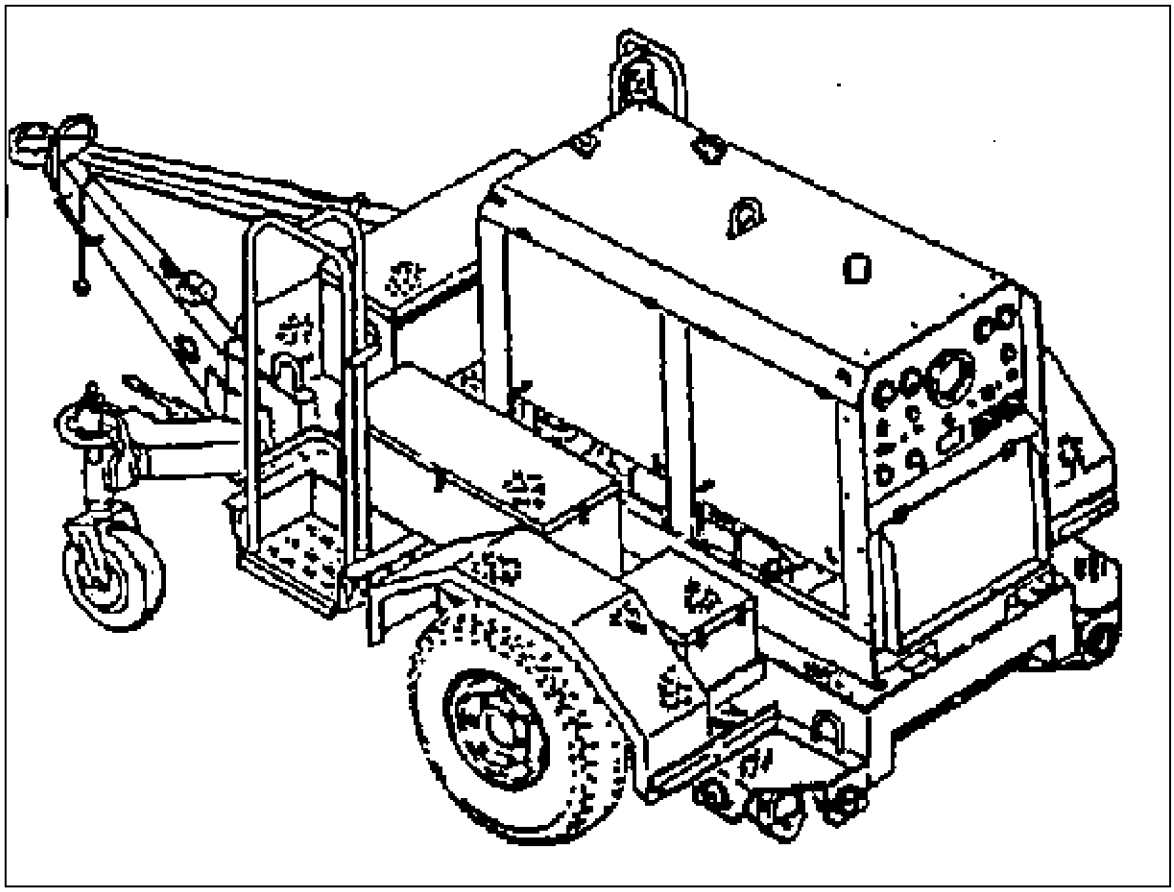

NSN 3431-01-153-9585

EFFECTIVE DATE: 01 October 2001

TABLE OF CONTENTS

	Section and Reading	Page
1.0	Scope	1
1.1	Background	1
1.2	Item Identification	1
2.0	Applicable Documents	1-2
2.1	Military Specification	2
2.2	Military Standards	2
2.3	Other Government Documents and Publications	2
2.4	Industry Standards	3
3.0	Requirements	3
3.1	General Task	3
3.2	IROAN Objective and Functions	4
3.3	Detail Task	4
3.3.1	Phase I Pre-induction	4-5
3.3.2	Phase II IROAN	5-12
3.3.3	Phase III Inspection Testing and Acceptance	12
3.3.4	Phase IV Packing Handling Storage and Transportation (PHS&T)	12-13
3.4	Configuration Management	13
3.4.1	Configuration Status Accounting (CSA)	13
3.4.2	Configuration Control	13
3.5	Government Furnished Equipment (GFE)/ Government Furnished Material (GFM)	13-14
3.6	Contractor Furnished Material (CFM)	14

3.7 Quality Assurance Provisions 14-15

3.8 Acceptance 15

3.9 Rejection 15

4.0 Reports 15

4.1.1 Pre-Induction Checklist 16

4.1.2 Final Operational Test Checklist 16

4.1.3 Configuration Checklist 16

4.1.4 Special Note 16

Appendix A Pre-Induction Checklist A-1 – A-9

Appendix B Final Operational Test Checklist B-1 – B-5

Appendix C Configuration Checklist C-1

STATEMENT OF WORK FOR THE TRAILER MOUNTED ARC WELDING MACHINE

NSN 3431-01-153-9585, Model DCC-353-P

Inspect Repair Only As Necessary (IROAN)

1.0 **SCOPE.** This Statement of work (SOW) establishes and sets forth tasks and identifies the work efforts that shall be performed by the Contractor in the IROAN effort of the TRAILER MOUNTED ARC WELDING MACHINE. This document contains requirements to restore the TRAILER MOUNTED ARC WELDING MACHINE to condition code "A." Condition code A is defined as "serviceable/issuable without qualification. Equipment defined as such should be new, used, repaired or reconditioned material which is serviceable/issuable to all customers without limitation or restriction. This includes material with more than 6 months shelf-life remaining". The Welding Machine is mounted on a Chassis, Trailer, M353, NSN 2330-00-542-2831. Once the Welding Machine is mounted on the M353 Trailer, the trailer becomes a major component of the Trailer Mounted Arc Welding Machine. The TRAILER MOUNTED ARC WELDING MACHINE, National Stock Number 3431-01-153-9585, Weapon System Code KA, shall be known as the WELDING MACHINE.

During the pre-induction inspection, or during the IROAN process, if it is determined that the M353 Trailer is not economical repairable, a replacement M353 Trailer will be provided by the Government upon request. All Welding Machines IROANed under provisions of this SOW will include the IROAN of the M353 Trailer as a requirement of this SOW. The M353 Trailer shall be IROANed in accordance with IROAN ***SOW-02-835-2-05945A-2/1***.
This SOW addresses requirement for IROAN of the Welding Machine and the M353 Trailer as a single unit.

Questions related to this SOW should be addressed to the Welding Machine Weapon System Manager, Life Cycle Management Center, Code 837-2, MARCORLOGBASES, Albany ***GA***. Commercial Phone ***(229) 639-6533*** or DSN 567-6533.

1.1 **BACKGROUND.** IROAN is defined as "The maintenance technique which determines the minimum repairs necessary to restore equipment components or assemblies, to prescribed standards by utilizing all available diagnostic equipment and test procedures in order to minimize disassembly and parts replacement."

1.2 **ITEM IDENTIFICATION.** The Welding Machine, Arc, DCC-353-P is a 350-amp constant current/constant voltage diesel engine driven welding machine. The welder is mounted on a steel frame which is secured to a two-wheel M353 trailer chassis. Toolboxes are mounted on the trailer for storage of welding kits and sets. Storage space is also provided for one oxygen and one Acetylene cylinder.

2.0 **APPLICABLE DOCUMENTS.** The following documents form a part of this SOW to the extent specified. Unless otherwise specified, the issues of these documents are those listed in the Department of Defense Index of Specifications and Standards (DoDISS) and supplement thereto which is in effect on the date of solicitation. In the event of conflict between the documents

referenced herein and the contents of this SOW, the contents of this SOW shall be the superseding requirement.

2.1 **MILITARY SPECIFICATIONS**:

MIL-C-81309 Corrosion Preventive Compounds, Water Displacing, Ultra-Thin Film.

2.2 **MILITARY STANDARDS**

MIL-STD-129	DoD Standard Practice for Military Marking
MIL-STD-130	***DoD Standard Practice*** Identification Marking of U.S. Military Property.

2.3 **OTHER GOVERNMENT DOCUMENTS AND PUBLICATIONS.** The issues of these documents cited below shall be used.

ATPD 2241	Vehicles, Wheeled: Preparation for Shipment and Storage of.
SL-3-04055C	Components List for Welding Machine Arc
SL-4-04055C	Repair Parts List for Welding Machine, ARC
TI-04055C-35/1	Solenoid Adjustment, Horbart Welder
TM-4750-15/1	Painting and Registration Marking for Marine Corps Combat and Tactical Equipment
TM 04055C-15/1	Trailer Mounted Arc Welding Machine
TM 3080-34	Corrosion Prevention and Control
SOW-02-835-2-05945A-2/1	Statement of Work, Inspect and Repair Only As Necessary for Chassis, Trailer, M353, NSN 2330-00-542-2831
DoD 4000.25-1-M	MILSTRIP Manual
NAVICPINST 4491.2A	NAVICP Instruction: Requisitioning of Contractor Furnished Material from the Federal Supply System

Military Handbooks (For Guidance)

MIL-HDBK-61	***Configuration Management Guidance***

2.4 **INDUSTRY STANDARDS.**

Quality Assurance in ANSI/ISO/ASQC ***Q9002***-1994Quality Systems-Model for Production, Installation, and Servicing.

Industry Standards (For Guidance)

ANSI/EIA-649	***National Consensus Standard for Configuration Management***

Copies of Military ***Standards*** and Specifications are available from the DoD Single Stock Point, Document Automation and Production Service, Building 4/D, 700 Robbins Avenue, Philadelphia, PA 19111-5094. Telephone (215) 697-2179 or DSN 442-2179, or http://www.dodssp.daps.mil. ***Copies of other government documents and publications required by contractors in connection with specific SOW requirements shall be obtained through the Contracting Officer: Commander, Attn: Contracting Officer (Code 891) Marine Corps Logistics Bases, 814 Radford Blvd., Albany, Georgia 31704-1128, commercial telephone number (229) 639-6761 or DSN 567- 6761. Copies of engineering drawings, if applicable, shall be obtained from Life Cycle Management Center, Attn: Code 851-3, 814 Radford Blvd. Suite 20320, Albany, Georgia 31704-0320, commercial telephone number (229) 639-6410 or DSN 567-6410.***

3.0 **REQUIREMENTS**

3.1 **GENERAL TASKS.** In fulfilling the specified requirements, the contractor shall:

a. Provide materials, labor, facilities, missing parts, and repair parts necessary to inspect, diagnose, restore, and test the Welding Machine. Upon completion of IROAN, repaired equipment shall be Condition Code ”A". SL-3-04055C components provided by the Marine Corps shall also be repaired under the provision of this SOW. SL-4-04055C contains the complete parts list for the Welding Machine.

b. Provide all tools and test equipment required to test, inspect, and calibrate the Welding Machine.

c. In-process and final on-site testing must be witnessed by the Weapon System Manager (Code 837-2), MARCORLOGBASES, Albany, and/or their representatives.

d. The contractor shall be responsible for all structural, electrical and mechanical requirements associated with the restoration of the Welding Machine.

e. The Contractor shall be responsible for the application of Technical Instruction TI-04055C-35/1 during the restoration of the Welding Machine.

3.2 **IROAN OBJECTIVE AND FUNCTIONS**. After IROAN, the Welding Machine shall have the following minimum characteristics:

a. Reliable as per system specifications. System specifications are found in TM 04055C-15/1, Chapter 1, Section 1-3.

b. Maintainable as per system specifications.

c. Serviceable (Condition Code "A").

d. All equipment systems and components shall operate as intended.

3.3 **DETAIL TASKS.** The following tasks describe the different phases for IROAN of the Welding Machine.

Phase I	***Pre-Induction***
Phase II	***IROAN***
Phase III	***Inspection, testing and acceptance***
Phase IV	***Packing, Handling, Storage and Transportation (PHS&T)***

3.3.1 **PHASE I-PRE-INDUCTION.**

a. A pre-induction inspection analysis shall be performed for the Welding Machine using the contractor facility's diagnosis, inspection and testing techniques to determine extent of work and parts required. These findings shall be annotated on the Pre-Induction Checklist located in Appendix A and shall be maintained and be made available upon request to the Weapon System Manager (Code 837-2), MARCORLOGBASES, Albany, and/or their representatives.

b. Test equipment shall be used to determine that assemblies and subassemblies meet prescribed reliability, performance, and work requirements. In cases when conformance to the SOW cannot be certified through existing inspection and testing procedures and by use of diagnostic equipment, the assembly shall be removed, disassembled, inspected, tested or repaired to the degree necessary to assure full conformance with this SOW.

c. Oil seal and gasket leakage. Evidence of lubricating or hydraulic oils passing through or around a seal is not a defect; however, consideration must be given to the fluid capacity in the item being checked/inspected. Inspection shall normally be performed during and immediately following an operational test, but not sufficient duration to allow the fluids to return to ambient temperature. The following shall be used as a guide in determining degree of oil loss:

1. Class I - Seepage of fluid (indicated by wetness or discoloration) not great enough to form drops.

2. Class II - Leakage of fluid great enough to form drops, but not enough to cause drops to fall from the item being checked/inspected.

3. Class III - Leakage of fluid great enough to form drops that fall from the item being checked/inspected.

NOTE

A CLASS I OR II LEAK, EXCEPT FUEL SYSTEM AND BRAKE SYSTEM, IS AN ACCEPTABLE CONDITION AT ANY TIME AND DO NOT REQUIRE CORRECTIVE ACTION.

3.3.2 **PHASE II - IROAN**. IROAN shall be performed at the contractor's facility. Information recorded on the IROAN Pre-induction inspection sheets during pre-inspection phase shall be used as a guide by the contractor to achieve the mechanical baseline of production. After pre-induction tests and inspections have been completed, repair of the Welding Machine shall be accomplished in accordance with this SOW and TM 04055C-15/1. Deficiencies noted on the Pre-Induction Checklist during Phase I shall be repaired/replaced. Components or assemblies shall not be disassembled for replacement of mandatory parts unless that part has failed, or the component assembly wherein the part is located is disassembled for repair.
Final Operational Test Checklist which is Appendix B of this SOW shall also be provided.
The following efforts shall be performed as part of the IROAN:

a. **DETAILED MECHANICAL WORK.** Welding Machines received for IROAN shall be reworked in accordance with the paragraphs 3.3.2 b. through 3.3.2 j. of this SOW. All discrepancies noted on the IROAN Pre-induction Inspection sheet shall be repaired/replaced.

b. **HARDWARE**

(1) Replace broken, unserviceable and/or missing hardware including nuts, bolts, screws, washers, turnlock fasteners, safety, and one-time use items, etc, in accordance with the IROAN. Unserviceable would include any of the above that failed to function properly.

(2) Ensure proper hardware locking devices are present on all moving mechanical assemblies.

(3) Hardware normally supplied with commercial parts shall be used unless specifically prohibited.

(4) Hardware used in this IROAN shall be in accordance with SL-4-04055C.

c. **ENGINE ASSEMBLY**

(1) **Test Procedures**. Prior to initial inspection, always make visual checks to assure normal operating conditions exist (fluid levels are correct, belt tension. etc.). Engine will not be removed from the Welding Machine unless major defects are found during the initial inspection, oil analysis and operational testing of the engine. Defects not related to the engine but requires engine removal to facilitate repairs is also an exception for engine removal. Each engine assembly will be IROANed of all reported deficiencies. The engine will be detail cleaned and inspected for loose, damage, or missing parts. Special emphasis will be in place on mechanical noises which may identify internal engine damage. No unusual vibrations, excessive oil consumption, excessive exhaust smoke, leakage ***of exhaust gases, exhaust restrictions, loss of coolant, low engine oil pressure below 30 psi (4.35kp) or engine overheating (engine temperature should be less than 205 degrees F) are permitted.***

If engine repair is required, remove and repair per technical references shown in TM 04055C-15/1, sections 3-28 through 3-39, sections 4-16 through section 4-37 and section 5-1 through 5-5.

(2) **PASS/FAIL.** The engine shall be complete and contain no loose, damaged, or missing parts. Engine shall operate without unusual vibrations, excessive oil consumption, excessive exhaust smoke, leakage of exhaust gases, exhaust restrictions, loss of coolant, engine oil pressure shall be between 30 to 60 psi (4.35 to 8.7kp) or engine operating temperature shall be no higher than 205 degree f. Repaired Engines shall be in compliance with the engine wear limits listed in Section 5-6 of TM 04055C-15/1.

d. **FUEL SYSTEM**

(1) **Test Procedures**. Test the following in accordance with TM 04055C-15/1 to conform with inspection and testing procedures to assure full conformance with this SOW.

(a) Inspect the fuel pump assembly for loose or broken items and cracks. Check fuel pump output pressure for proper operating pressure range.

(b) Inspect fuel injectors and fuel injector's fuel lines for rust and leakage.

(c) Inspect the air cleaner indicator for proper function.

(d) Inspect fuel tank, fuel lines and hoses for rust and leakage.

(e) Inspect ether cold starting system switch, cylinder valve, pressure switch, thermal close valve/bushing, and atomizer cylinder for proper function and cracked/leaking tubing. Inspect engine cold starting switch, wiring and pre heater.

(f) Inspect throttle cable and linkage for binding and proper function. Assure the turn to lock fixture of this assembly is functional and will stay fixed in place while engine ***is*** running.

(g) Inspect air cleaner assembly for corrosion, damage and leaking.

(h) Replace all oil, fuel and air filters 100 percent.

(i) Test Emergency Shutdown Solenoid for proper adjustment and operation.

(2) **PASS/FAIL.** Fuel pump shall operate as stated in paragraph 3-30, sub paragraph b. of TM 04055C-15/1. Fuel injector fuel lines shall not leak and ***shall*** be free of corrosion. No fuel leaks are permitted in the fuel system. Air cleaner indicator shall function as designed and shall be clean of dirt and paint. Fuel tank shall be free of rust and foreign substances that will cause engine malfunctions. Fuel gage shall function correctly and not leak. Fuel gage shall be free of dirt and paint or any other substances that will hinder reading of the gage. Ether start assembly shall be certified as operational on the Final Operational Test Checklist. The ether bottle valve shall be sealed in such a manner as to protect the nipple opening of the valve from corrosion and foreign material.

The Welding Machine throttle cable shall not bind and ***shall*** operate as designed. Throttle cable is a pull and turn to lock cable assembly. Throttle cable shall maintain the lock position when set. Air cleaner assembly shall be free of corrosion, damage and leaks (both air and water). All oil, fuel, and air filters have been installed new. All mounting hardware such as screws, bolts, washers, and nuts are all in-place and properly tighten as per TM 04055C-15/1. Emergency Shutdown Solenoid shall function as system requires. Return spring shall be free of paint build up between spring coils that will prevent proper operation.

Procedures for repair/replacement can be found in TM 04055C-15/1.

e. **COOLING SYSTEM**

The cooling system consists of the radiator, fan, drive belt(s), thermostat, water pump, hoses and fittings. The engine coolant is circulated through the radiator, where it gives up its heat to the air stream developed by the fan, which is belt driven from the crankshaft. The water pump draws the cooling liquid through the radiator and discharges it into the lower part of the cylinder block. Openings in the water jacket around the cylinder bores connect with corresponding openings in the cylinder head, through which liquid rises to circulate around the valves. The coolant then passes through to the cylinder head, the thermostat, and back into the radiator.

(1) **TEST PROCEDURES**. Test the following in accordance with TM 04055C-15/1 to conform with inspection and testing procedures to assure full conformance with this SOW.

a. Inspect water manifold for leaks.

b. Inspect thermostat housing for leaks.

c. Inspect fan blades for breaks, bends, and missing rivets.

d. Inspect water pump for leaks and cracks.

e. Inspect radiator for cracks and leaks.

f. Inspect hose clamps for tightness.

g. Test alternator output voltage.

h. Test starter motor operation.

(2) **PASS/FAIL.** Repair/replace coolant, coolant belts, radiator, and heater hoses. Replace antifreeze protection. all parts having stripped or damaged threads. Replaced all damaged or deteriorated hoses and missing hose clamps. Repair/replace alternator/starter motor as required.

Procedures for repair/replacement can be found in TM 04055C-15/1.

f. **DECK ASSEMBLIES**

The chassis assembly consists of the front and rear deck assemblies. The front deck assembly contains welding rod box assembly, accessory box assembly, wire feeder box assembly, torch outfit box assembly, and the deck assembly. The rear deck assembly contains two cable and wire box assemblies and the deck assembly.

(1) **TEST PROCEDURES**.

(a) Deck Assemblies: Inspect the forward and rear deck assemblies side rails and cross members for loose mounting and broken welds. Inspect the two cylinder support brackets for missing hardware, functional strap assemblies, and any damage that may render them unsafe.

(b) Storage Box Assemblies: Inspect all storage box assemblies for damage and missing hardware. Inspect lid seal strips for damage. Inspect for damage that results in penetration of storage box walls and lids and damage that will not allow the storage box lid to close or seal.

(2) **PASS/FAIL** Repair/Replace the following in accordance with TM 04055C-15/1.

(a) Deck Assemblies: Deck assemblies shall not contain broken welds or loose cross members. Cylinder support brackets strap assemblies will be in place and will function as designed. All common hardware (screws, nuts, and washers) found to be damaged or missing during inspection shall be replaced.

(b) Storage Box Assemblies: Storage box assemblies shall contain no major damage. Small dents are permitted. Storage box seal strips shall be replaced 100 per cent. The welding rod box, accessory box, wire feeder box, and torch outfit box all have locking devises. These storage boxes locking devise (hasp) shall be complete and functional. The wire feeder box assembly shall contain the smaller box used for feed roller storage. The small box shall contain no damage that will prevent the box to function as designed. No gaps are permitted between the box walls and lid. When lid is closed, the lid seals shall fit with enough pressure to assure water tightness. Seal pressure shall not be so great that it will hinder the equipment operator from closing the lid in normal faction.

Replace all parts found to be damaged in accordance with TM 04055C-15/1.

g. **RUST PROOFING AND PAINTING (Exterior/Interior).**

All vehicles shall be rust proofed as required. Rust proofing shall be in accordance with ***the*** following procedures.

(1) Clean area with either steam or high pressure water to remove dirt and loosen corrosion.

(2) Treat affected (corroded) areas with phosphoric fog.

(3) ***Reclean in accordance with procedure 1 identified above.***

(4) Apply MIL-C-81309 TYPE I, a water displacing corrosion inhibitor, to the affected areas.

(5) Prime and paint per latest edition of TM-4750-15/1.

Procedures for corrosion prevention and control are in accordance with TM 3080-34.

All exterior surfaces of the Welding Machines shall be painted with Chemical Agent Coating (CARC) paint. Paint color shall be Desert Sand or Green 383. Color of individual Welding Machines will be identified by the Weapon System Manager and/or their representative(s) upon induction into the IROAN cycle.

h. **ELECTRICAL SYSTEM.**

NOTE

All vehicles for IROAN shall not have batteries installed. Install new dry batteries for welding machines designated for Stock/Storage and install wet (Hot) batteries designed for MPF and for immediate delivery to Marine Units.

The electrical system is a 24-volt system with a negative ground. Install hot batteries before testing the electrical system.

(1) **TEST PROCEDURES**. Components a. through k. shall be inspected, tested, and repaired as required. Trouble Shooting Procedures, paragraph 3-6 and the Trouble Shooting Chart, Table 3-3 in TM 04055C-15/1 provides references and procedures for inspection and repair of these components.

(a) Control Panel.

(b) Polarity Switch.

(c) CC/CV Selector Switch.

(d) Power Output Terminal and Shunt.

(e) Ballast Resistor.

(f) Control and Stability Reactors.

(g) Power Rectifier.

(h) Control Contactor.

(i) Range Switch.

(j) Electrical Harness and Circuit Breakers.

(k) Welder Generator.

(2) **PASS/FAIL.**

(a) All gauges, switches, and lights shall function as designed. Replace any gauge or switch that does not function properly after assuring that the gauge or switch sending unit is not defective. Replace gauge sending units ***if*** defective.

(b) Electrical wiring harness shall be clean and functional with all electrical plugs and ***connectors*** in place. Electrical wiring harnesses shall be secured to the Welding Machine in such a manner as to protect the harness from entanglement in moving parts of the welder. Replace any wiring that is frayed or broken.

(c) Circuit breakers shall function as designed. All circuit breakers shall be secured in place with no movement allowed. Circuit breakers shall not contain ***any*** heat damage.
Circuit breaker terminals shall be free of damage caused by electrical arching. Electrical connections to the breaker shall be firmly secured with no movement allowed. Terminals shall be free of rust and corrosion.

(d) Control Switch, Polarity Switch, CC/CV Selector Switch, and Range Switch shall be secured in place with no movement allowed. Electrical connections and terminals of these devices are to be firmly secured with no movement allowed. Terminals shall be free of damage caused by electrical arching. Terminals and electrical connectors shall be free of rust and corrosion.

(e) Power Output Terminal and Shunt, Ballast Resistor, Control and Stability Reactors, Power Rectifier, and Control Contactor shall be secured in place with no movement allowed. Electrical connections and terminals of these devices are to be firmly secured with no movement allowed. Terminals shall be free of damage caused by electrical arching. Terminals and electrical connectors shall be free of rust and corrosion.

(f) Welder Generator exciter brushes and slip rings shall be free of damage caused by electrical arching. Brushes shall be replaced when they are worn unevenly or they measure less than 7/16 inches (11MM). Slip rings shall be free of rust, corrosion, and other foreign material. Slip rings shall contain no scoring or rough surfaces. Electrical connections and terminals (other than the brushes) are to be firmly secured with no movement allowed. Access plates and covers shall be in place with no nuts, bolts, and washers missing. Generator shall be free of rust, corrosion, and foreign material. Generator bearings shall be replaced if they are loose or noisy.

Procedures for repair/replacement can be found in TM 04055C-15/1.

i. **M353 TRAILER**. The M353 Trailer shall be IROANed of all deficiencies identified on IROAN ***SOW-02-835-2-05945A-2/1*** Pre-Induction Checklist.

j. **DATA PLATES AND DECALS**.

DATA PLATE. Each repaired Welding Machine shall have an IROAN data plate affixed next to the existing data plate. The data plate shall meet the requirements of MIL-STD-130 and TM-4750-15/1.

(1). **TEST PROCEDURES**. Inspect Welding Machine for missing, damaged, and illegible data plates and decals.

(2). **PASS/FAIL.** Replace all data plates and decals that are missing and illegible. IROAN data plates shall be prepared by the contractor and contain the following information:

EQUIPMENT SERIAL NO._____
REPAIRED IN ACCORDANCE WITH ***SOW-02-837-2-04055C-2/1***
CONTRACTOR FACILITY_____
DATE_____.
HOUR READING AT TIME OF IROAN_____.

NOTE

Reading of hour meters that require replacement during the IROAN are to be recorded as information to be included in the record jacket of that vehicle. The equipment record jacket is also to be annotated that these components were replaced during the IROAN and the reading annotated on the IROAN data plate is that of the hour meter that required replacement.

RECORD JACKET: All major equipment or components serial numbers that are replaced during the IROAN are to be identified by the contractor for entry in the record jacket of the Welding Machine (This include engines, welder generator, etc.). Information will list the Welding Machine serial number, Name of equipment/component(s) replaced, serial number of deficiency equipment/component(s), serial number of replacement equipment/component(s), and if the equipment/component(s) is new or rebuilt.

All Modification Instructions (MI), Technical Instruction (TI), and Product Improvements (PIP) installed as a result of this SOW are to be identified by the contractor for recordation in the vehicle record jacket. Information will list the Welding Machine serial number, MI, TI, and/or PIP publication title and number.

3.3.3 **PHASE III - INSPECTION, TESTING AND ACCEPTANCE.**

a. Inspection, testing and acceptance of the Welding Machine shall be conducted in accordance with TM 04055C-15/1 and this SOW.

b. The Contractor shall be responsible for conducting required tests and shall ensure all necessary personnel are available to complete the final acceptance. Acceptance tests shall be held at the contractor facility. The Weapon System Manager (Code 837-2), MARCORLOGBASES, Albany, and/or their representatives shall be given a minimum of two weeks notice prior to beginning acceptance testing. The test area shall be set up with all safety consideration incorporated (test area clearly defined, limit excess. to unauthorized vehicle and foot traffic, etc.).

c. The Contractor shall be responsible for correcting any deficiencies identified during inspection/testing. MARCORLOGBASES Albany, representatives may require the Contractor to report tests or portions thereof, if the original tests fail to demonstrate compliance with this SOW.

d. Acceptance testing on all Welding Machines repaired under the provisions of this SOW shall be accomplished in accordance with TM 04055C-15/1.

3.3.4 **PHASE IV - PACKAGING, HANDLING, STORAGE, AND TRANSPORTATION (PHS&T).**

a. The Contactor shall be responsible for preservation and packaging of items being repaired under the terms of this statement of work. Items scheduled for long-term storage or shipment to overseas destinations shall be in accordance with the level A requirements of ATPD 2241. Items scheduled for domestic shipment, immediate use or short-term storage shall be to level B requirements. Should the Welding Machine be identified as Maritime Pre-positioned Forces material by the Weapon Systems Manager, it shall be preserved and packed as defined below:

(1) Batteries shall be hot and disconnected from vehicle electrical system. Terminals and leads will be taped. Fuel tank will be filled ¼ full of JP 5/8. The air intake system, exhaust and gages shall be depreserved.

b. Marking shall be in accordance with MIL-STD-129.

c. The Marine Corps will provide the contractor with shipping address(es) for the delivery of the repaired equipment. The Contractor shall be responsible for arranging for shipment to the pre-designated site(s). The Marine Corps will be responsible for transportation costs associated with shipping the subject equipment to and from the contractor.

3.4 **CONFIGURATION MANAGEMENT.**

3.4.1 **CONFIGURATION STATUS ACCOUNTING (CSA).**

a. The Contractor shall determine the application status of approved configuration changes by visual inspections to the extent possible. The government will identify the configuration changes to be inspected by furnishing a Configuration Checklist (Appendix C) to the Contractor. The Contractor shall use one checklist for each Welding Machine to record the inspection findings along with other required data.

b. The Contractor shall record serial numbers of the assemblies listed on the Configuration Checklist. The Contractor shall record the information on the same form that was used to record the application status of configuration changes.

3.4.2 **CONFIGURATION CONTROL.** ***The contractor shall apply configuration control procedures to established configuration items. The contractor shall not implement***

configuration changes to an item's documented performance or design characteristics without prior written authorization. If it is necessary to temporarily depart from the authorized configuration, the contractor shall prepare and submit a Request For Deviation. MIL-HDBK-61 (paragraph 4.3 and Table 4-9) and ANSI/EIA-649 (paragraph 5.3.4) provide guidance for preparing this configuration control documents.

3.5 **GOVERNMENT FURNISHED EQUIPMENT (GFE) GOVERNMENT FURNISHED MATERIEL (GFM)**.

GFE is government owned equipment authorized by contract for use by a commercial/government contractor. It is neither consumed during production nor incorporated into any product. GFM is materiel furnished to a contractor that will be consumed during the course of production or incorporated into product being manufactured/remanufactured under a contract/ statement of work. In the event the Marine Corps does have GFE/GFM requirements, the Management Control Activity (MCA/Code 827-2), Marine Corps Logistics Bases, Albany, Georgia, will coordinate required GFE and will maintain a central control on Marine Corps assets in the Contractor's possession. The MCA will forward a GFE Accountability agreement to the Contractor Facility for signature to establish a chain of custody and property responsibilities for Marine Corps assets. The Contractor shall report receipt of all GFM and report consumption of GFM to the MCA.

3.6 **CONTRACTOR FURNISHED MATERIEL (CFM)**.

The Marine Corps has adopted the Navy's procedures regarding Contractor Furnished Materiel (NAVICPINST 4491.2A). In the event that Contractor Furnished Materiel is required for repair parts, the contractor shall requisition through the DOD Supply System. DOD 4000.25-1-M, (MILSTRIP) Chapter 11 authorizes contractors to requisition through the DOD Supply System.

3.7 ***QUALITY*** **ASSURANCE PROVISIONS.**

The performances of the Contractor and the quality of work delivered, material provided and documents written shall be subject to in-process review and inspection by the Weapon System Manager and/or their representative(s) during contract performance. Inspection may be accomplished at any work location. Authorized Weapon System Manager representative(s) shall be permitted to observe the work/task accomplishment or to conduct inspections at all reasonable hours within contractor normal working hours. Acceptance tests shall be held in-plant. Inspection by Weapon System Manager ***(Code 837-2)*** and/or their representative(s) of all acceptance tests plans, materials and associated lists furnished hereunder does not relieve the Contractor from any responsibility regarding defects or other failures to meet contract requirements which may be disclosed prior to final acceptance.

The Contractor shall provide and maintain a Quality System that as a minimum, adheres to the requirements of ANSI/ISO/ASQC Q9002-1994 Quality Systems-Model for Quality Assurance in Production, Installation, and Servicing. The Contractor's work shall be subject to in-process reviews and inspections for compliance with Quality Systems by Weapon System Manager ***(Code 837-2)*** and/or their representative(s). Noncompliance with procedures resulting in degraded quality of work may result in a stop-work order requiring action by the Contractor to correct the work

performed and to enforce compliance with quality assurance procedures or face contract termination. Notwithstanding such Weapon System Manager ***(Code 837-2)*** and/or their representative's inspection, it shall be the Contractor's responsibility to ensure that the entire system meets the performance requirements delineated and addressed in the Welding Machine TM 04055C-15/1 and this SOW.

Quality assurance operations performed by the Contractor shall be subject to the Weapon System Manager ***(Code 837-2)*** and/or their representative(s) verification at any time. The Weapon System Manager ***(Code 837-2)*** and/or their representative(s) verifications can include, but shall not be limited in any matter, to the following:

a. Inspection of materials, products, assemblies, and documentation to assess compliance with quality standards.

b. Surveillance of operations to determine that quality assurance, practices, methods, and procedures are being properly applied.

c. Inspections of deliverable products to assure compliance with all requirements of the Welding Machine, this SOW, and applicable documents used herein.

d. Failure of the ***contractor*** facility to promptly correct deficiencies discovered, shall be a reason for suspension of acceptance until corrective action has been made.

3.8 **ACCEPTANCE.**

The performance of the Contractor and the quality of work delivered, including all equipment furnished and documentation written or compiled, shall be subject to in-process review and inspection during performance. Inspection may be accomplished in plant or at any work site or location, and Marine Corps ***(Code 837-2)*** representatives shall be permitted to observe the work or to conduct inspection at all reasonable hours. Final inspection and acceptance testing shall be conducted at the Contractor's facility. Finally acceptance shall be conducted on 100 percent of items to verify that the units meet all requirements.

Acceptance testing. The Welding Machine IROANed under the provisions of this SOW shall be accomplished in accordance with TM 04055C-15/1, and this SOW.

3.9 **REJECTION**.

Failure to comply with any of the specified requirements listed herein shall be reason for rejection by the Weapon System Manager ***(Code 837-2)*** and/or their representative(s). ***The Contractor at no additional cost to the Marine Corps shall provide the following:***

a. Develop an approach for modification or correction of all deficiencies.

b. On approval of a documented approach, the Contractor shall correct the deficiencies and repeat verification until acceptable compliance with acceptance test procedures is demonstrated.

4.0 **REPORTS**.

The following reports shall be provided to the Weapon System Manager ***(Code 837-2)*** and/or their representative. Reports shall be forward to: Life Cycle Management Center, ATTN: Weapon System Manager (Code 837-2), 814 Radford Blvd, Marine Corps Logistic Bases, Albany ***GA***., 31704-1128. Reports may be duplicated in an electronic database and maintained in that database. If data is selected to be provided electronically to the Weapon System Manager, MCLB Albany, Code 837-2, and/or their Representatives, the Data base program must be agreed to by both the Contractor and the Weapon System Manager, MCLB Albany, (Code 837-2) and/or their representative.

4.1.1 **Pre-Induction Checklist**.

The Contractor shall complete the Pre-Induction Checklist for each Welding Machine repaired. The Pre-Induction Checklist contained within ***SOW-02-835-05945A-2/1*** shall also be provided as a requirement of this SOW clause. These documents shall be available during final acceptance testing. One copy of each document shall be provided to the Weapon System Manager ***(Code 837-2)*** and/or their representative(s) after final acceptance of the Welding Machine, or upon request.

4.1.2 **Final Operational Test Checklist**.

The contractor shall provide one copy, per vehicle, of the Final Inspection Checklist for the Welding Machine. One copy per vehicle of the Final Operational Test Checklist contained within SOW-02-835-2-05945A-2/1 shall also be provided as a requirement of this SOW clause. These reports shall be available for review during the final acceptance testing. One copy of each document shall be provided to the Weapon System Manager ***(Code 837-2)*** and/or their representative(s) after final acceptance of the Welding Machine, or upon request.

4.1.3 **Configuration Checklist.**

The Contractor shall complete the Configuration Checklist (Appendix C) for each Welding Machine IROANed. This document shall be available during final acceptance testing. One copy of each document shall be provided to The Weapon System Manager ***(Code 837-2)*** and/or their representative(s) after final acceptance of the Welding Machine, or upon request.

4.1.4 **Special Note.**

There are no requirements set forth in this SOW for IROAN of the Wire Feeder that is listed in TM 04055C-15/1. This item is obsolete.

PRE-INDUCTION CHECKLIST
IROAN SOW-02-837-2-04055C-2/1

TRAILER MOUNTED ARC WELDING MACHINE MODEL DCC-353-P NSN 3431-01-153-9585 IF NOT APPLICABLE MARK N/A IN REMARKS BLOCK	**SAT**	**MISSING**	**SERVICE**	**ADJUST**	**REPAIR**	**REPLACE**	**MODIFY**	**REMARKS**	**INSPECT**
1. **Engine Assembly** Condition Operation Leakage **Mounting** Screws Washers Nuts **Paint** Spec. Conformance Coverage **Lubrication** Application and Type									
2. **Fan and Alternator Belts** Condition									
3. **Engine Coolant Lines** Condition Leakage **Mounting** Clamps									
4. **Radiator** Condition Coolant Level Leakage **Mounting** Screws Washers Nuts **Guards and Shrouds** Condition Screw Washers (Plain and Lock) Nuts **Paint** Spec. Conformance Coverage									
5. **Muffler** Condition **Mounting**									

PRE-INDUCTION CHECKLIST
IROAN SOW-02-837-2-04055C-2/1

Studs Washers Nuts Gasket									
6. **Engine Air Cleaner Assembly** Condition **Mounting** Screws Nuts Washers (Plain and Lock) Clamps **Hose Assembly** Hose Clamps Adapter									
7. **Fuel Injection Lines** Condition Leakage Fittings **Mounting** Clamps and bolts									
8. **Fuel Lift Pump** Condition Gasket Leakage **Input Tube** Tube Fitting **Output Tube** Hose Fitting Clamp									
9. **Water Trap Assembly** Condition Leakage Drain Plug **Feed/ Output Lines** Hose Fittings Clamps									
10. **Fuel Filter Assembly** Condition Leakage Drain Plug **Feed/Output Lines** Hoses and Tubes									

PRE-INDUCTION CHECKLIST
IROAN SOW-02-837-2-04055C-2/1

Fittings Clamps									
11. **Fuel Supply Lines** Condition Leakage Fitting Mounting									
12. **Fuel Tank Assembly** Condition Leakage **Fuel Gage** Leakage Functional Readability **Mounting** Straps Nuts Bolts Washers (Plain and Lock)									
13. **Either Starting Aid** Condition Operation **Mounting** Screws Washers (Plain and Lock) Nuts									
14. **Electric Starting Motor** Condition Operation Mounting									
15. **Engine Alternator** Condition Operation Mounting □									
16. **Ignition Solenoid** Condition Operation Mounting									
17. **High Speed Stop Solenoid And Angle Drive Assembly** Condition Operation Mounting									

PRE-INDUCTION CHECKLIST
IROAN SOW-02-837-2-04055C-2/1

Gasket **Lubrication** Application and Type									
18. **Emergency Shutdown Solenoid Assembly** Condition Operation Mounting									
19. **Oil Pressure Switches** Condition Operation **Oil Lines** Hose Clamps Fittings									
20. **High Temperature Shutdown Switch** Condition Operation									
21. **Exciter Brush Assembly** Condition Electrical Connectors Brushes Brush Holders Slip Rings Mounting Hardware									
22. **Welding Generator** Condition Operation **Mounting** Screws Washers (Plain and Lock) Nuts **Paint** Spec. Confirmation Coverage									
23. **Range Switch Assembly** Condition Operation Electrical Connections **Mounting** Screws Washers (Plain and Lock) Nuts **Lubrication** Application and Type									

PRE-INDUCTION CHECKLIST
IROAN SOW-02-837-2-04055C-2/1

24. **Fine Current and CV Voltage Control Rheostats** Condition Operation Electrical Connections **Mounting** Screws Washers (Plain and Lock) Nuts									
25. **Control Contractor Assembly** Condition Operation Electrical Connectors Electrical Contacts Insulator(s) **Mounting** Screws Washers (Plain and Lock) Nuts									
26. **CC/CV Selector Switch** Condition Operation Electrical Connections Electrical Contacts **Mounting** Screws Washers (Plain and Lock) Nuts **Lubrication** Application and Type									
27. **Ballast Resistor Assembly** Condition Operation Electrical Connections Resistor **Mounting** U-Bolts Screws Nuts Brackets									
28. **Polarity Switch Assembly** Condition Operation									

PRE-INDUCTION CHECKLIST
IROAN SOW-02-837-2-04055C-2/1

Electrical Connections Electrical Contacts **Mounting** Screws Washers (Plain and Lock) Nuts Brackets and Plates Control Handle									
29. **Power Rectifier Assembly** Condition Operation Electrical Connections Electrical Insulators **Mounting** Screws Washers (Plain and Lock) Nuts Brackets and Plates									
30. **Control and Stability Reactors** Condition Electrical Connectors **Mounting** Screws Washers (Plain and Lock) Nuts □									
31. **Canopy and Side Doors** Condition **Mounting** Screws Washers (Plain and Lock) Nuts Hinges and Latches									
32. **Control Panel Door and Lower Rear Panel** Condition **Mounting** Screws Washers (Plain and Lock) Nuts									
33. **Control Panel Assembly** Condition									

PRE-INDUCTION CHECKLIST
IROAN SOW-02-837-2-04055C-2/1

Instruments Condition Readability Labels and Markings **Mounting** Screws Washers (Plain and Lock) Nuts **Paint** Spec. Confirmation Coverage									
34. **Power Output Terminal Assembly** Condition Electrical Connections Bus Bars Shunts Insulators Name Plate **Mounting** Screws Washers (Plain and Lock) Nuts □									
35. **Storage Box Assemblies** Condition **Mounting** Screws Washers (Plain and Lock) Nuts **Paint** Spec. Confirmation Coverage									
36. **Front and Rear Deck Assemblies** Condition Bottle Straps **Mounting** Welds Screws Washers (Plain and Lock) Nuts **Paint** Spec. Conformation									

PRE-INDUCTION CHECKLIST
IROAN SOW-02-837-2-04055C-2/1

Coverage									
37. **Throttle Cable Assembly** Condition Operation Mounting									
38. **NATO Slaving Receptacle** Condition Operation **Mounting** Screws Washers (Plain and Flat) Nuts									
39. **Battery Box** Condition **Mounting Hardware** Bracket Studs Nuts **Cables** Condition									
40. **Welder Electrical Wiring Harness** Condition **Mounting** Straps Clamps Screws Washers (Plain and Lock) Nuts									
41. **Welder and Trailer Paint (End Item B2685)** Spec. Confirmation Coverage									
☐									
☐									

Additional Remarks:

FINAL OPERATIONAL INSPECTION CHECKLIST
IROAN SOW-02-837-2-04055C-2/1

TRAILER MOUNTED ARC WELDING MACHINE MODEL DCC-353-P NSN 3431-01-153-9585 IF NOT APPLICABLE MARK N/A IN REMARKS BLOCK	SAT	SERVICE	ADJUST	REPAIR	REPLACE	MODIFY	REMARKS	INSPECT
1. **Engine Assembly** a. The engine is complete and contains no loose, damaged, or missing parts. b. Engine operates without unusual vibration, excessive oil consumption, excessive exhaust smoke, leakage of exhaust gases, and lost of coolant. c. Engine oil pressure is between 30 to 60 psi (4.35 to 8.7 kp) d. Engine operating temperature is no higher than 205 degree f. e. Engine throttle cable and linkage does not bind. Cable turn to lock fixture maintains its hold position when set by the operator. f. Engine fuel system contains no fuel leaks.								
2. **Electrical System and Controls** a. **Gauges, Switches, and Lights** All gauges, switches, and lights shall operate and performs their functions as identified in TM 04055C-15/1. b. **Electrical Wiring Harnesses**; Wiring harnesses are clean and functional with all electrical plugs and connectors in working order. Wiring harnesses are secured to the welding machine in such a manner as to protect the harness from entanglement in moving parts of the welding machine. c. **Circuit Breakers**; All circuit breakers are secure in their in mounting area with no movement.								

Circuit breakers contain no heat damage. Circuit breaker terminals are free of damage caused by electrical arching. Electrical connections and terminals are firmly secured with no movement. Terminals are free of rust and corrosion. All circuit breaker function as per system requirements. d. **Switches**; Control Switch, Polarity Switch, CC/CV Selector Switch, and the Range Switch are secured in their mounting place. Electrical connections and terminals firmly secured with no movement allowed. Terminals are free of rust and corrosion. Terminals are free of damage caused by electrical arching. All switches function as per system requirements. e. **Miscellaneous Electrical Components**; Power Output Terminal and Shunt, Ballast Resistor, Control and Stability Reactors, Power Rectifier, and Control Contractor are firmly secured to its proper mounting place. Electrical connections and terminals of these devices are firmly secured with no movement. Terminals and electrical connections free of rust and corrosion. Devices function as per system requirements.								
f. **Engine Alternator** Alternator is firmly secured in its' mounting brackets with proper V belt tension. V belt is not dry rotted, contains cracks, or contains any indication of slippage or running hot (shinny side walls on belt). All terminates are free of rust and								

corrosion and is securely fixed it their proper place. Alternate runs without any bearings or bushings noise. Alternate output voltage is at least 24 volts.								
g. **Engine Starter Motor** Electrical connectors and fittings are securely fastened to terminals. Terminals are free of rust and corrosion. Engine drive assembly engages engine flywheel and turns engine without slipping or grinding. Start motor turns engine without dragging or overheating. Starter motor solenoid engages starter as per system requirements.								
3.**Canopy, Side Doors, and Panels** The canopy, side doors and panels are free of rust and corrosion. All attachment hardware is in place with no missing components. All latches and locking devices are in place and functional. No side doors, panels or the canopy is missing or damaged. All labels, decals, and markings as identified in TM 04055C-15/1 are affixed on the canopy, side doors and panels in their proper place.								
4. **Storage Box Assemblies (Six Storage Boxes)** Storage box assemblies are free of rust, corrosion, and damage Storage box lids are sealed as per system requirements. Storage box locking devices (hasp) are functional, hinges move freely, and are free of damage. All storage boxes are securely fastened to the welding machine deck assemblies.								
5. **Deck Assemblies (Front and Rear)**								

Deck assemblies are free of rust, corrosion, and damage. Front deck assembly gas bottles storage racks are not damage and bottle retaining straps are in place and functional. Deck assemblies are securely mounted on trailer with no missing mounting hardware. Deck assembly storage boxes are securely mounted to the deck assemblies in their proper place.								
6. **Welding Generator** Generator brushes length is greater than 7/16 inches (11 MM) long. Exciter brushes and slip rings are free of damage caused by electrical arching, corrosion, and foreign material (dirt, oil, etc.). Generator bearings are not loose or noisy. Generator output voltage is between 90 and 92 volts.								
7. **Corrosion and Paint** Welding Machine and Trailer meets the corrosion and Painting requires of this IROAN SOW.								

Additional Remarks:

FINAL OPERATIONAL INSPECTION CHECKLIST
IROAN SOW-02-837-2-04055C-2/1

IROAN SOW-02-837-2-04055C-2/1

CONFIGURATION CHECKLIST
WELDEDING MACHINE, ARC, MODEL DCC-353-P

VEHICLE:

Marine Corps Registration Number _____.

OEM Model Number _____.

Vehicle Hours at Pre-Induction _____.

Vehicle Engine:

Original Engine Serial Number _____.

Engine Required Replacement: _____ YES _____ NO.

Replacement Engine Serial Number _____.

APPROVED CONFIGURATION CHANGES:

Approved Waivers/Deviations applied during IROAN:

Waivers: _____

Deviations: _____

Modification/Technical Instructions:

TI 04055C-35/1 Applied Prior IROAN _____During IROAN _____

CONTRACT DATA REQUIREMENTS LIST

(1 Data Item)

Form Approved
OMB No. 1704-0188

The Public reporting burden for this collection of information is authorized to average 110 hours per response, including the time for reviewing instructions, searching existing data sources, gathering and maintaining the data needed, and completing and reviewing the collection of information. Send comments regarding this burden estimate or any other aspect of this collection of information, including suggestions for reducing this burden, to Department of Defense, Washington Headquarters Services, Directorate for Information Operations and Reports 1215 Jefferson Davis Highway, Suite 1204, Arlington, VA 22202-4302 and to the Office of Management and Budget, Paperwork Reduction Project (0704-0188), Washington, DC 20503. Please DO NOT RETURN your form to either of these addresses. Send completed form to the Government issuing Contract Officer for the contract/PR No. listed in block E.

A. CONTRACT LINE ITEM NO.	B. EXHIBIT	C. CATEGORY: TDP ____ TM ____ Other XXX
D. SYSTEM/ITEM: Trailer Mounted ARC Welding Machine	E. CONTRACT/PR No.	F. CONTRACTOR

1. DATA ITEM No.	2. TITLE OF DATA ITEM	3. SUBTITLE	17. PRICE GROUP
A001	Request for Deviation (RFD)	Configuration Management	

4. AUTHORITY (Data Acquisition Document No.)	5. CONTRACT REFERENCE	6. REQUIRING OFFICE	18. ESTIMATED TOTAL PRICE
DI-CMAN-80640C	SOW 3.4.2	MARCORLOGBASESALB 851-2	

7. DD 250 REQ.	9. DIST STATEMENT REQUIRED	10. FREQUENCY	12. DATE OF FIRST SUBMISSION
LT	A	AS REQ	See Blk 16
8. APP CODE		**11. AS OF DATE**	**13. DATE OF SUBSEQUENT SUBMISSION**
A			

16. REMARKS

Block 4: Contractor format is authorized.

Blocks 10 & 12: RFDs shall be submitted to obtain authorization to deliver nonconforming material which does not meet the prescribed configuration documentation.

RFDs will be reviewed and disposition determined within 30 calendar days upon receipt by the government.

RFDs shall be transmitted via e-mail to the following address: mbmatcomconfigmngmnt@matcom.usmc.mil

Distribution Statement A: Approved for public release, distribution is unlimited.

14. DISTRIBUTION

a. ADDRESSEE	b. COPIES: Draft	FINAL: Reg	FINAL: Repro
MCLBA 851-2	0	1	0
MCLBA 837-2	0	1	0
15. TOTAL	0	2	0

G. PREPARED BY:	H. DATE	I. APPROVED BY:	J. DATE
[signature]	SEP 21 2000	James A. Adams	00297