STATEMENT OF WORK (SOW)
INSPECT AND REPAIR ONLY AS NECESSARY (IROAN) OF THE
M1A1 MINE CLEARING BLADE
NSN 2590-01-230-8862
TAM E09967M ID. # 09147A

1.0 Scope. This Statement of Work (SOW) establishes and sets forth tasks and identifies the work effort that shall be preformed by the contractor to IROAN the Mine Clearing Blade (MCB), NSN 2590-01-230-8862. For the purpose of this SOW, contractor is defined as the commercial or government entity performing the IROAN. This document contains requirements to IROAN to Condition Code "A". Condition Code "A" is defined as serviceable/issuable without qualification, new, used, repaired, or reconditioned materiel which is serviceable and issuable to all customers without limitation or restriction, including materiel with more then six month shelf life remaining.

1.1 Background. There is only one each of the subject MCB in the Marine Corps inventory that requires Iroan/Rework. The attached Rework Procedure was developed by Tank Automotive Command (TACOM) to ensure that the MCB will fit all configurations of the M1A1, Main Battle Tank.

2.0 Applicable Documents. The following documents form a part of this SOW to the extent specified. Unless otherwise specified, the issues of these documents are those listed in the Department of Defense Index of Specifications and Standards (DoDISS) and supplement thereto which is in effect on the date of solicitation. In the event of conflict between the documents referenced herein and the contents of this SOW, the contents of this SOW shall be the superceding requirement.

2.1 Military Standards

MIL-STD-129	DoD Standard Practice for Military Marking

2.2 Other Government Documents and Publications

TM 9-2590-509-23&P	Unit and Intermediate Direct Support Maintenance Manual Including Repair Parts and Special Tools List
UnNumbered	M1 Mine Clearing Blade System Rework Procedure for M1A1 Heavy Armor Tanks
DoD 4000.25-1-M	MILSTRIP Manual
AK12308862	Special Packaging Instruction

Military Handbooks (For Guidance)

MIL-HDBK-61	Configuration Management Guidance

2.3 Industry Standards.

ANSI/ISO/ASQC Q9003-1994	Quality Systems - Model for Quality Assurance in Final Inspection and Test
ANSI/EIA-649	National Consensus Standard for Configuration Management

Copies of Military Standards and Specifications are available from the DOD Single Stock Point, Document Automation and Production Service, Building 4D, 700 Robbins Avenue, Philadelphia, Pa 19111-5094, telephone commercial (215) 697-2179 or DSN 442-2179, or http://www.dodssp.daps.mil. Copies of other government documents and publications required by the contractors in connection with specific SOW requirements shall be obtained through the Contracting Officer: Commander, Attn: Contracts Department (Code 891), P.O. Drawer 43019, 814 Radford Blvd., Marine Corps Logistics Bases, Albany, Georgia 31704-3019, commercial telephone number (229) 639-6761 or DSN 567-6761. Copies of engineering drawings, if applicable, shall be obtained from Supply Chain Management Center, Attn: Code 583-1, 814 Radford Blvd., Suite 20320, Albany, Georgia 31704-0320, commercial telephone number (229) 639-6410 or DSN 567-6410.

3.0 Requirements.

3.1 The contractor shall IROAN/Rework the MCB in accordance with the M1 Mine Clearing Blade System Rework Procedure for M1A1 Heavy Armor Tanks dated 28 October 1991. TM 9-2590-509-23&P shall be used in conjunction with the Rework procedures in IROAN/Reworking this Mine Clearing Blade.

3.2 Quality acceptance and test procedures will be performed in accordance with M1 Mine Clearing Blade System Rework Procedure for M1A1 Heavy Armor Tanks dated 28 October 1991.

3.3 Quality Assurance Provision. The contractor shall provide and maintain a Quality System that, as a minimum, adheres to the requirements of ANSI/ISO/ASQC Q9003-1994, Quality Systems- Model for Quality Assurance in Final Inspection and Test.

3.4 Configuration Management. The contractor shall apply configuration control procedures to established configuration items. The contractor shall not implement configuration changes to an item's documented performance or design characteristics without receiving prior written authorization. If it is necessary to temporarily depart from the authorized configuration, the contractor shall prepare and submit a Request for Deviation. MIL-HDBK-61 and ANSI/EIA-649 provide guidance for preparing these configuration control documents.

3.5 Government Furnished Equipment (GFE)/Government Furnished Materiel (GFM). The Management Control Activity (MCA/Code 573-2) will coordinate Government Furnished Equipment/Government Furnished Material (GFE)/(GFM) requests and maintain a central control system on all government owned assets in the contractor's possession. The MCA will forward a GFE Accountability Agreement to the contractor for signature on an annual basis to establish a chain of custody and identify property responsibilities for Marine Corps assets. The contractor is to acknowledge receipt of GFM to the MCA within 15 days of receipt.(This can be done by mailing (Material Management Department, Management Control Activity (Code 573-2) 814 Radford Blvd, Suite 20320, Albany, Georgia 31704-0320) or Faxing (commercial 229-639-5498 or DSN 567-5498) a copy of the DD1348).

3.6 Contractor Furnished Materiel (CFM). The contractor may requisition materiel as required in the performance of the SOW through the DoD Supply System. DoD 4000.25-1-M (MILSTRIP) Chapter 11 provides guidance to contractors on the requisitioning process. The contractor's decision to utilize CFM procured from the DoD Supply System shall be based upon cost effectiveness, availability of material and the required completion/delivery date.

3.7 Packaging, Handling Storage and Transportation (PHS&T).

a. The Contractor shall be responsible for the preservation and packaging of items being repaired under the terms of this statement of work. Items scheduled for shipment to all destinations shall be in accordance with the requirements of Special Packaging Instruction AK12305288, which may be obtained from the Storage and Distribution Department (Code 580) Attn: Business Management Branch (Code 581), Suite 20320, 814 Radford Boulevard, Albany, Georgia 31704-0320, commercial telephone (229) 639-6786 or DSN 567-6786.

b. Marking for shipment and storage shall be in accordance with MIL-STD-129.

c. The Marine Corps will provide the contractor with the shipping address(es) for delivery of the rebuilt equipment. The contractor shall be responsible for arranging for the shipment to the pre-designated site(s). The Marine Corps will be responsible for transportation cost associated with shipping the subject equipment to and from the Contractor.

CONTRACT DATA REQUIREMENTS LIST

(1 Data Item)

Form Approved
OMB No. 0704-0188

The public reporting burden for this collection of information is estimated to average 110 hours per response, including the time for reviewing instructions, searching existing data sources, gathering and maintaining the data needed, and completing and reviewing the collection of information. Send comments regarding this burden estimate or any other aspect of this collection of information, including suggestions for reducing the burden, to Department of Defense, Washington Headquarters Services, Directorate for Information Operations and Reports (0701-0188), 1215 Jefferson Davis Highway, Suite 1204, Arlington, VA 22202-4302. Respondents should be aware that notwithstanding any other provision of law, no person shall be subject to any penalty for failing to comply with a collection of information if it does not display a currently valid OMB control number. Please DO NOT RETURN your form to the above address. Send completed form to the Government Issuing Contracting Officer for the Contract/PR No. listed in Block E.

A. CONTRACT LINE ITEM NO.	B. EXHIBIT	C. CATEGORY: TDP ___ TM ___ OTHER X
D. SYSTEM/ITEM: M1A1 Mine Clearing Blade	E. CONTRACT/PR NO.	F. CONTRACTOR

1. DATA ITEM NO.	2. TITLE OF DATA ITEM	3. SUBTITLE
A001	Request For Deviation	Configuration Management

17. PRICE GROUP

18. ESTIMATED TOTAL PRICE

4. AUTHORITY (Data Acquisition Document No.)	5. CONTRACT REFERENCE	6. REQUIRING OFFICE
DI-CMAN-80640C	SOW 3.4	MCLBA (583)

7. DD 250 REQ	9. DIST STATEMENT REQUIRED	10. FREQUENCY	12. DATE OF FIRST SUBMISSION
LT		ASREQ	See Blk 16
8. APP CODE		**11. AS OF DATE**	**13. DATE OF SUBSEQUENT SUBMISSION**
A	A		See Blk 16

16. REMARKS

Blk 4 - Contractor format is authorized and shall be submitted in .doc or .pdf format.

Blks 10 & 12: RFDs will be reviewed and disposition determined within 30 calendar days upon receipt by the Government.

Block 14: RFDs shall be submitted via e-mail to the following address: mbmatcomconfigmngmnt@matcom.usmc.mil

Distribution Statement A: Approved for public release, distribution is unlimited

14. DISTRIBUTION

a. ADDRESSEE	b. COPIES Draft	Final Reg	Final Repro
MCLBA (583-1)	0	1	0
15. TOTAL →	0	1	0

G. PREPARED BY	H. DATE	I. APPROVED BY	J. DATE
Ana Rivera	17 Dec 2001	[illegible]	18 Dec 01

28 October 1991

M1 MINE CLEARING BLADE SYSTEM
REWORK PROCEDURE FOR M1A1 HEAVY ARMOR TANKS

1. VERIFICATION OF CONFORMANCE TO TDP:

prior to any modification of the frame of the Mine Clearing Blade, the following dimensions are to be checked for conformance to the requirements of the Technical Data Package. These are tank interface dimensions which, if not as specified, could mean that the frame is not compatible with the tank even after rework.

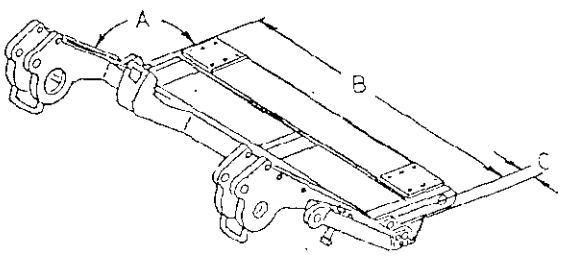

A - hull adapting angle calculated to be 137 degrees

B - towing eye spread, 70.748" to 71.024" allowed

C - towing eye relief, 2.401" to 2.481" allowed

2. PREPARATION FOR MODIFICATION:

a. as the entire rework procedure involves the cutting and removal of plate from the frame (either by air arc cutting or by oxy-acetylene cutting) and welding of new plates to the frame, the Mine Clearing Blade must be completely removed from its shipping container with care taken to preserve the container for repackaging following modification. No further disassembly (other than as noted in paragraph 3) is required.

b. the blades have been CARC painted and care must be taken to provide for <u>adequate</u> <u>ventilation</u> prior to any cutting or welding operation.

c. material requirements:

(1) steel - all steel used in this modification (as is the original metal) is 1.25" thick AISI 4130 Alloy Steel plate in the normalized condition

(2) welding electrode - the TDP recommendation is E7018 electrode, the wire utilized for procedural verification was AWS A5.20E71T-1 which is the recommended wire replacement for E7018. One source of supply is Alloy Rods Corp. of Hanover, Pa. (No II 70)

(3) there is no heat treatment of the parent metal and, as such, no requirement for the rework effort

(4) CARC Paint (appropriate color) and primer

3. PROCEDURE, FRAME PREPARATION:

a. remove find numbers 25 (6 total), 26 (6 total), 27 (2 total) and 28 (2 total) from the frame prior to any cutting

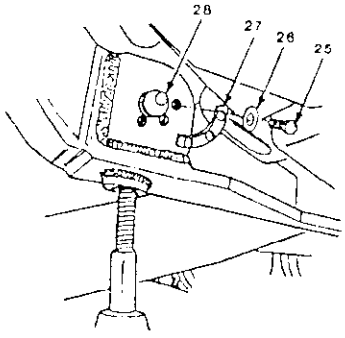

b. with minimal damage to the remaining frame, remove find numbers 16, 50 and 56 by either oxy-acetylene or air-arc cutting (air-arc is preferred as it will minimize damage to the remaining frame). Items 16, 50 and 56 are then scrap. Protect straps, threads, electrical connectors, holes etc. from splatter. It should be here noted that although the welds shown are those specified for this item, they are not necessarily those which were used for fabrication of the frame.

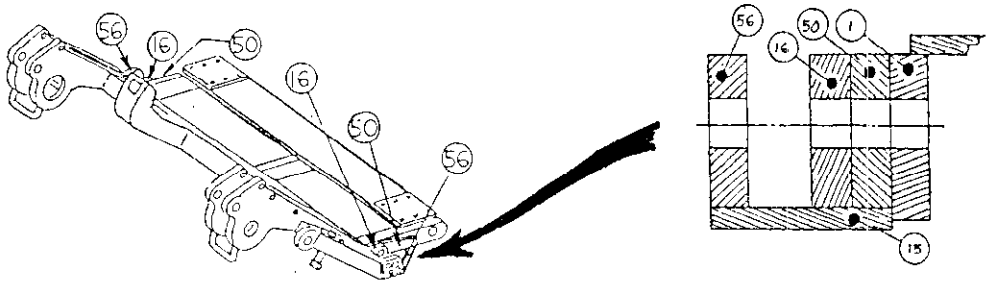

c. elongate hole in both find numbers 1 (left and right side) and find number 21 as shown below

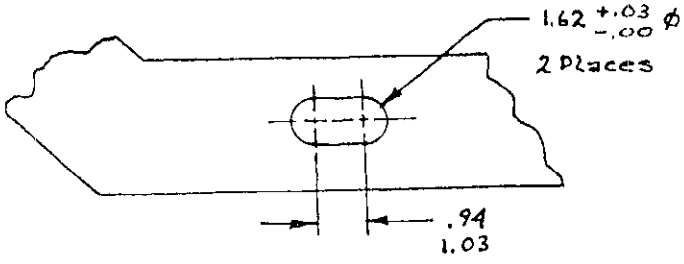

d. clean and dress areas from which find numbers 16, 50 and 56 were removed and holes were elongated

4. REPLACEMENT ITEMS FABRICATION:

a. Material Required:
plate, alloy steel, AISI 4130, normalized, 1.25" thick, 2 sheets of 4' by 8' required for 32 M1 Mine Clearing Blade reworks

b. Replacement Item Configuration:
Find No 50, 2 required per Blade system

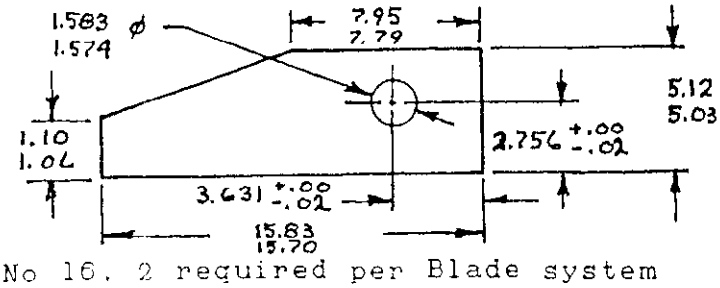

Find No 16, 2 required per Blade system

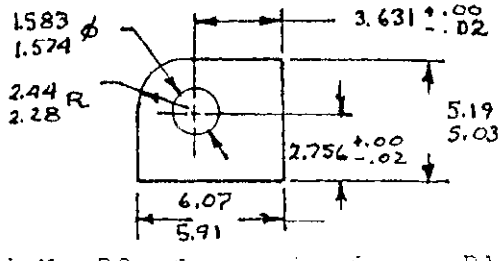

Find No 56, 2 required per Blade system

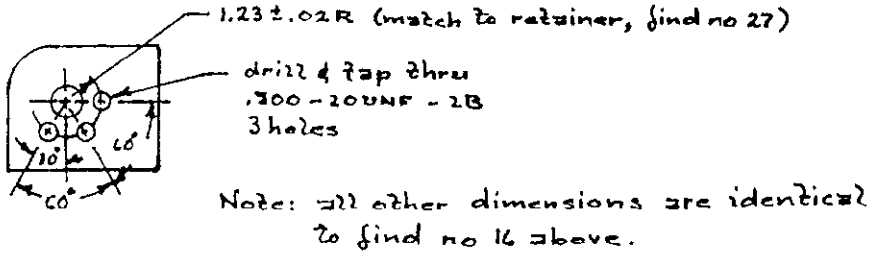

5. PROCEDURE, FRAME REBUILD:

a. Materials Needed:
(1) Tubing, Seamless, Structural Steel, 1.50" min to 1.53" max outside diameter, min wall thickness 0.12", 7' to 6'6" long (1 required)
(2) Tubing, Seamless, Structural Steel, 2.75" min to 2.78" max outside diameter, min wall thickness 0.12", 7' to 6'6" long (1 required)
(3) Pipe, schedule 40, 2" nominal size, 2.401" to 2.481" allowable length (2 required)
(4) Welding Wire, recommend AWS A5.20E71T-1, 1 spool per 2 M1 Mine Clearing Blade Systems (16 required for 32 Mine Clearing Blade reworks)
(5) Hole locator bar fabricated in accordance with the following sketch

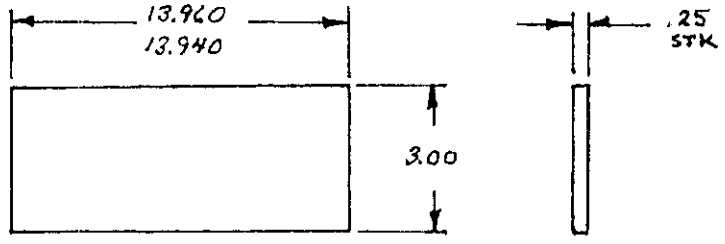

b. Installation of find no 50:

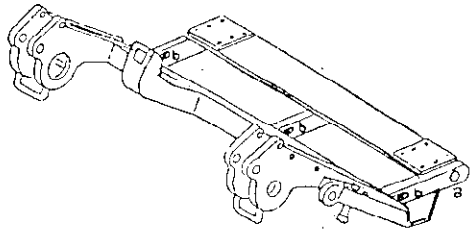

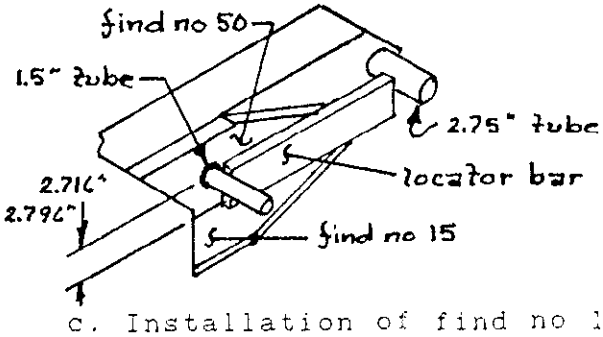

(1) place 2.75" tube thru holes identified by letter "a"
(2) place 1.5" tubing thru slots identified by letter "b"
(3) slide hole of find no 50 over tubing (do both ends)
(4) locate hole in "x" direction using locator bar shown above and in "y" direction by measuring 2.716" min to 2.796" max above find no 15. Tack in place!
(5) securely clamp in place and weld with details as noted in Appendix B ensuring that tubing slides freely thru both pieces

c. Installation of find no 16:

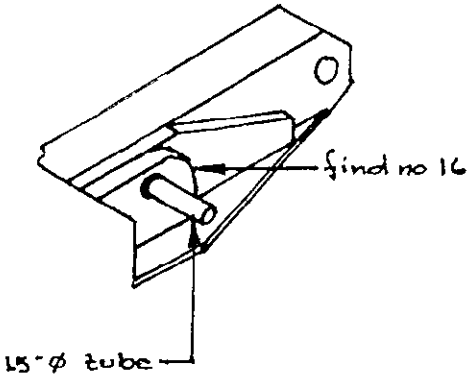

(1) Note: find no 15 may have warped slightly during the above welding. If so, material removal from find no 16 may be required to facilitate the fitting of this part (as opposed to straightening find no 15)
(2) slide hole of find no 16 over tubing (do both ends) this will locate these parts properly in both the "x" and the "y" direction. Tack in place!
(3) securely clamp in place and weld with details as noted in Appendix B again ensuring that tubing slides freely thru both pieces

d. Installation of find no 56

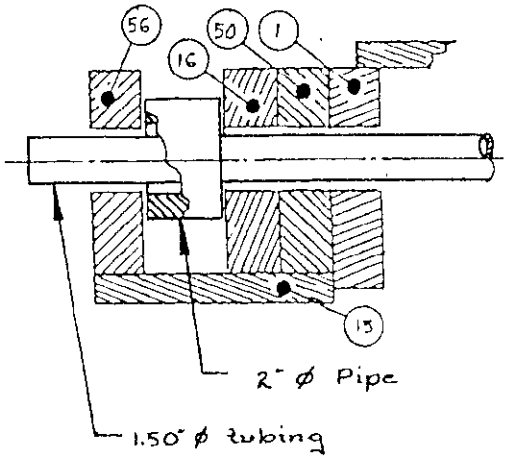

(1) Note: find no 15 may have warped slightly during previous welding. If so material removal from find no 56 may be required to facilitate the fitting of this part (as opposed to straightening find no 15)
(2) slide 2" pipe section over 1.5" tubing and then slide hole of find no 56 over tubing (do both ends) this will located these parts in both the "x" and the "y" direction. Tack in place!
(3) securely clamp in place and weld with details as noted in Appendix B again ensuring that tubing slides freely thru both pieces

e. Remove all tubing, protect all threaded holes, protect all holes which have mating parts, and prime and paint with the appropriate CARC color paint

6. COMMENTARY:

a. More detailed drawings of find nos 16, 50 and 56 are shown as Appendix A to this set of instructions
b. Weld detail is as depicted by Appendix B to this set of instructions
c. POCs for these rework instructions are John Allison or Ashby Graves, U.S. Army Belvoir Research Development & Engineering Center, Ft. Belvoir, Virginia, 220960-5606. Phone autovon 354-5470 or commercial (703) 664-5470

APPENDIX A

REPLACEMENT PARTS DETAILS

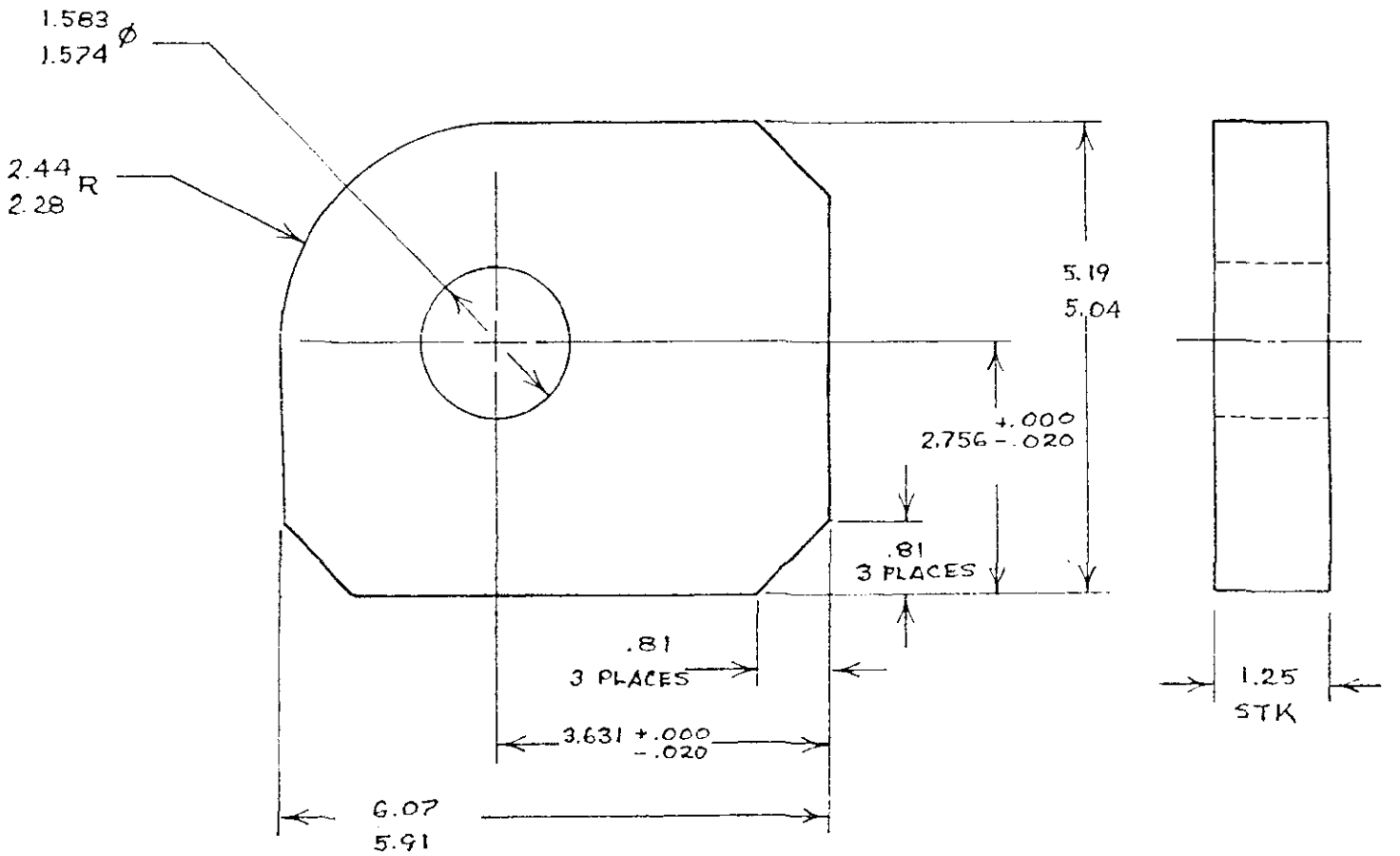

Find no 16
30 Oct 1991

Material:
Alloy Steel, AISI 4130, Normalized
Tolerances (Unless Specified):
2 Place Dec. ±.03; Angles ± 3°
Scale:
1" = 2"

J. Allison

APPENDIX A
Sheet 1 of 3

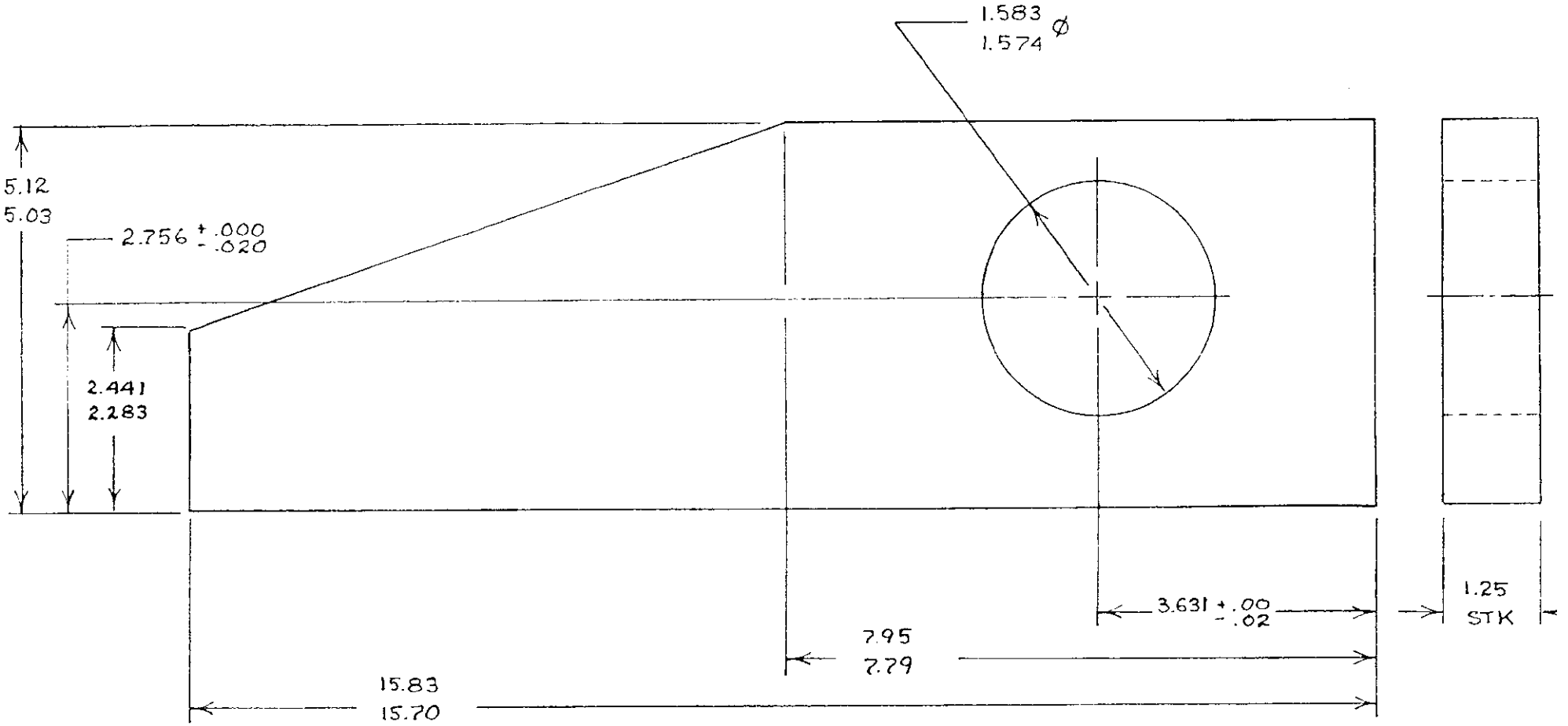

find no 50
30 Oct 1991

Material:
Alloy Steel, AISI 4130, Normalized

Tolerances (unless specified)
2 Place Dec. ±.03; Angles ±3°

Scale (except hole): 1" = 2"

APPENDIX A
Sheet 2 of 3

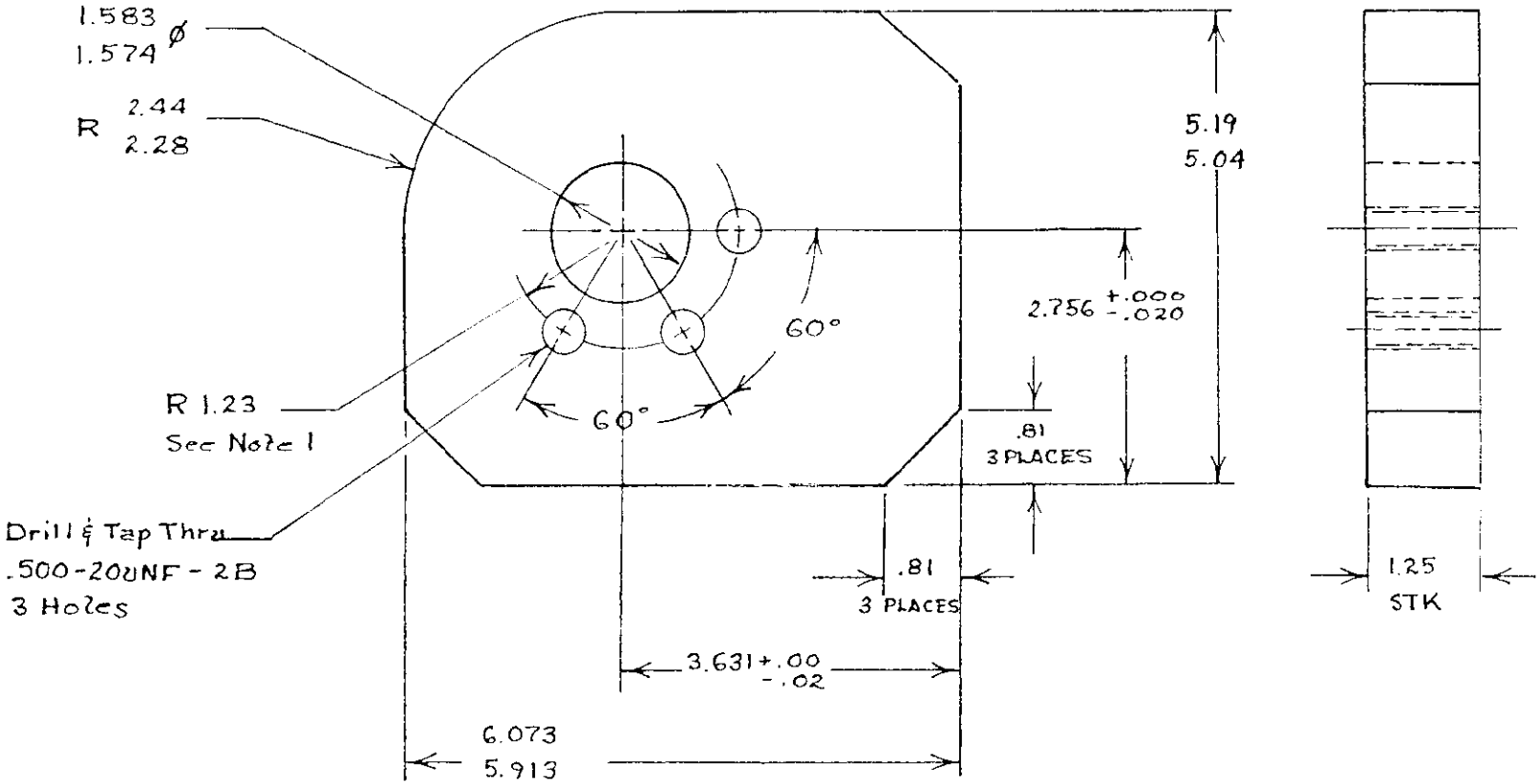

NOTES:

1. the holes located by this radius must mate with the "Retainer" (find no 27 / P/N 13228E6077). Some discrenpencies in fabrication have been noted here.

find no. 56
30 Oct 1991

Material:
Alloy Steel, AISI 4130, Normalized

Tolerances; Unless Specified:
2 Place Dec. ±.03; Angles ±3°

Scale: 1" = 2"

APPENDIX A
Sheet 3 of 3

APPENDIX B

WELDMENT DETAILS

A. Welding of find no 50 to frame:
(left side shown)

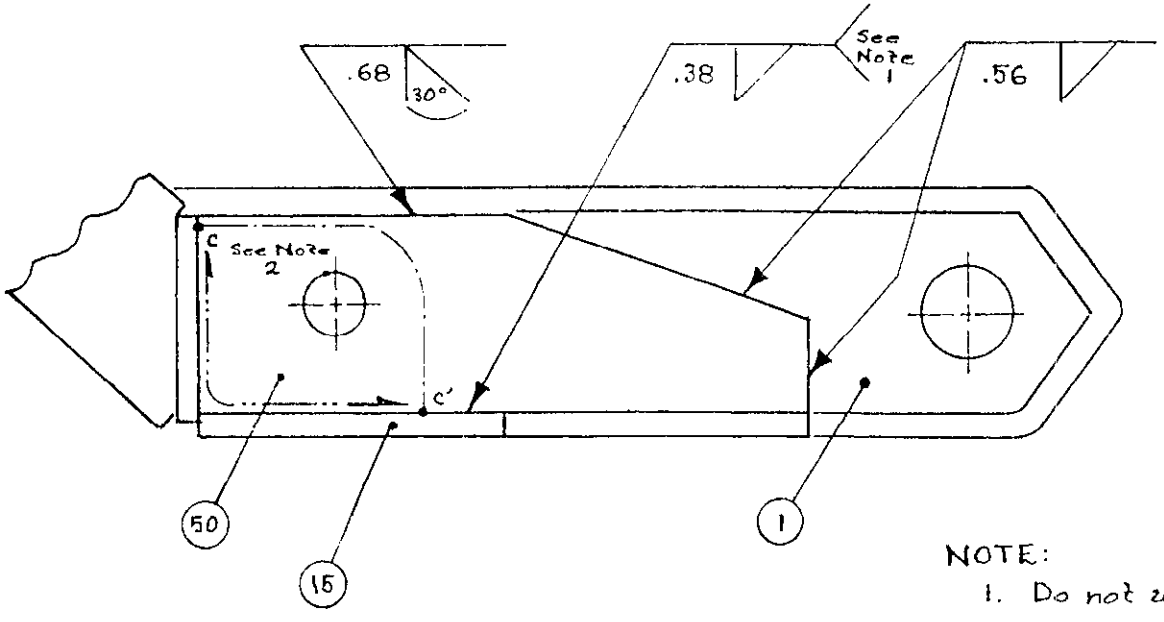

NOTE:

1. Do not weld where find number 16 will fit against find no 50. (point C to C')
2. Area from C to C' to be free of weld.

B. Welding of find no 16 in place:
(left side shown)

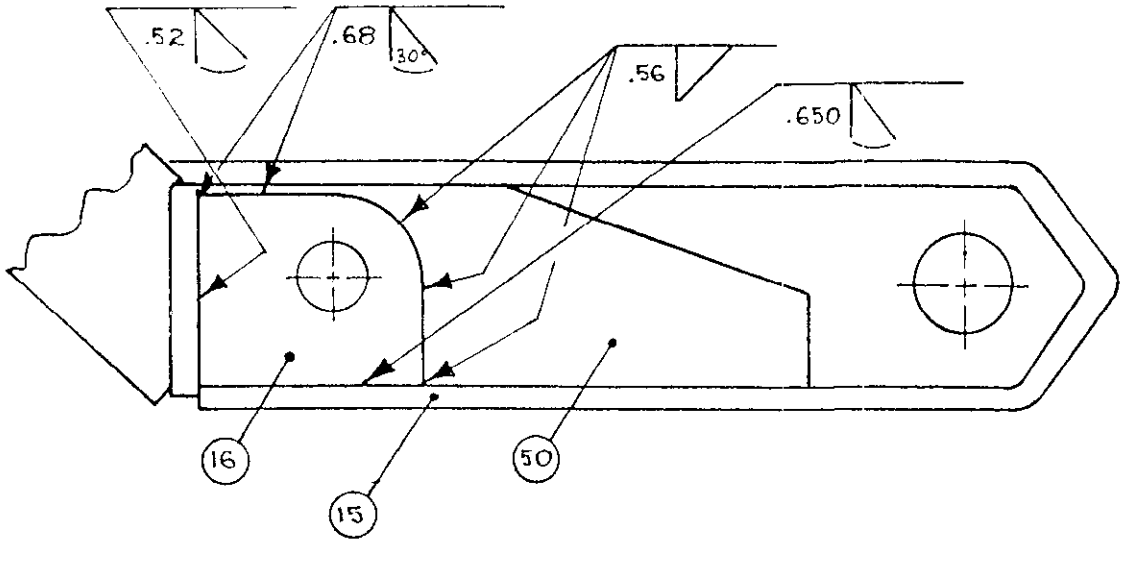

C. Welding of find no 56 in place:

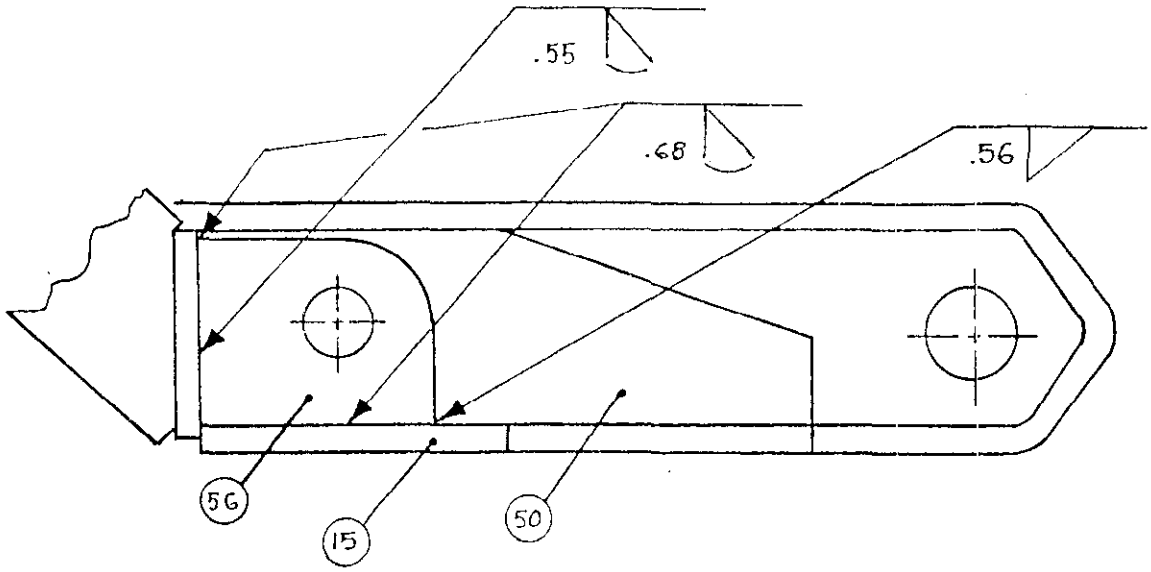

OFFICIAL USAGE ——— PLEASE BE AWARE THAT ANY USE OF THIS DATA OUTSIDE OF THE GOVERNMENT SHALL BE SUBJECT TO THE RESTRICTIONS SELECTED IN PARAGRAPH 4.5 OF DOD 5230.24 "DISTRIBUTION STATEMENTS ON TECHNICAL DOCUMENTS". BY USING THIS DOCUMENT YOU ARE LIABLE TO THE PERPETUATION OF CONTRACTUAL DAMAGES OR RESPONSE TO GOVERNMENT SUBPOENAS.

DWG NO.	SH
13228E6115	1 2

REVISIONS

ZONE	LTR	DESCRIPTION	DATE	APPROVED

WELDING REQUIREMENTS FOR M1 MCBS

1.0 APPLICABILITY

THIS DRAWING PROVIDES WELDING INSTRUCTIONS FOR MINE CLEARING BLADE SYSTEM USED ON M1 MAIN BATTLE TANK.

2.0 APPLICABLE DOCUMENTS

2.1 ANSI/AWS D 1.1-86 STRUCTURAL WELDING CODE
IN THE EVENT OF CONFLICT BETWEEN THE REQUIREMENTS OF THE CODE AND THOSE OF THIS DRAWING, THOSE OF THIS DRAWING SHALL GOVERN.

2.2 AWS A5.1 ELECTRODES, ARC WELDING, COVERED CARBON STEEL

2.3 AWS A5.18 WELDING CARBON STEEL FILLER MATERIALS FOR GAS SHIELDED ARC.

2.4 AWS A5.9 SPECIFICATION FOR CORROSION RESISTING CHROMIUM AND CHROMIUM NICKEL STEEL BARE AND COMPOSITE METAL CORED AND STRANDED WELDING ELECTRODES AND WELDING RODS.

3.0 WELDERS

ALL ASSEMBLIES SHALL BE WELDED BY WELDERS OR WELDING OPERATORS WHO HAVE BEEN CERTIFIED IN ACCORDANCE WITH AWS D 1.1.
ALL WELDED ASSEMBLIES SHALL BE IDENTIFIED BY THE PERSONAL METAL STAMP OF THE QUALIFIED WELDER OR OPERATOR WHO WELDED THE ASSEMBLY.

4.0 WELDING SYMBOLS AND DIMENSIONING

4.1 ALL WELD SIZES WILL BE "MINIMUM" UNLESS OTHERWISE SPECIFIED IN THE ENGINEERING DRAWING

4.2 UNLESS OTHERWISE SPECIFIED, THE WELD SIZE OF GROOVE WELDS SHALL BE AT LEAST FLUSH WITHIN 1/32 IN. OR 5% THE THICKNESS OF THE THINNEST BASE METAL, WHICHEVER IS SMALLER. THE SIZE OF FILLET WELDS SHALL BE AT LEAST 1/8 INCH OR 60% THE THICKNESS OF THE THICKEST BASE METAL, WHICHEVER IS LARGER.

4.3 UNLESS OTHERWISE SPECIFIED DIMENSIONS APPLY AFTER WELDING.

5.0 CLASSIFICATION OF WELDING

M1 MCBS WELDINGS LISTED IN TABLE 1 ARE CLASSIFIED IN TWO CLASSES:

5.1 CLASS I

WELDINGS THAT CONNECT ITEMS THAT CARRY INSIGNIFICANT LOAD WHILE MCBS IS INSTALLED ON M1 MBT DURING ALL MODES OF OPERATION INCLUDING TRAVEL.

5.2 CLASS II

STRUCTURAL WELDINGS THAT CARRY A SIGNIFICANT LOAD WHILE MCBS IS INSTALLED ON M1 MBT DURING ALL MODES OF OPERATION INCLUDING TRAVEL.

5.3 SYMBOLS ON DRAWINGS

UNLESS OTHERWISE SPECIFIED IN THE ASSEMBLY DRAWING OR IN TABLE 1, ALL WELDS SHALL BE CONSIDERED CLASS I.

6.0 FILLER METALS/PROTECTIVE GASSES

TABLE 1

DWG NO.	DESCRIPTION	CLASS	ELECTRODE CLASSIFICATION	SHIELDING GAS
13228E5945 13228E5950 13228E5951 13228E5952 13228E5961 13228E5962 13228E5963 13228E5964 13228E5965 13228E5966	MOLDBOARD R. H. MOLDBOARD FOLDING LOWER EXTENSION UPPER EXTENSION MOLDBOARD L.H. MOLDBOARD FOLDING LOWER EXTENSION UPPER EXTENSION PUSHBEAM L.H. PUSHBEAM R.H.	II	AWS E7015 AWS E7018	CO2 -
13228E5947	SKIDSHOE	I	AWS E7015 AWS E7018	CO2 -
13228E5973	TRAVEL LOCK	II	AWS E7015 AWS E7018	
13228E5968 13228E5969	ADJUSTING PLATE.RH ADJUSTING PLATE.LH	II	AWS E7015 AWS E7018	CO2
13228E5951	HOUSING	I	AWS E7015 AWS E7018	
13228E6012	MOUNTING FRAME	II	AWS E7015	CO2
		I	AWS E307	-

6.1 WELD AN ASSEMBLY WITH THE SAME FILLER METAL THROUGHOUT COMPLETE WELDING PROCESS UNLESS OTHERWISE SPECIFIED IN DRAWINGS.

6.2 DO NOT PERFORM HEAT TREATMENT AFTER WELDING WITH AUSTENITIC FILLER METAL.

6.3 FOR CLASS I WELDMENTS ON COMPONENTS WHICH HAVE ALREADY BEEN HEAT-TREATED.USE AUSTENITIC FILLER METAL.

6.4 ALL OTHER ASSEMBLIES SHALL BE WELDED IN ACCORDANCE WITH ENGINEERING DRAWING REQUIREMENTS.

7.0 PREPARATION OF BASE METAL

THE BASE METAL TO BE WELDED SHALL BE FREE OF ANY LUBRICANTS,PAINT,RUST AND MILLSCALE.CLEAN AS REQUIRED USING SOLVENTS ,POWER WIRE BRUSHING OR GRINDING.

8.0 PREHEATING AND INTERPASS TEMPERATURE

8.1 WELDMENTS USING FILLER METAL IN ACCORDANCE WITH AWS E7015 OR AWS E7018,ON SECTIONS THICKER THEN 1/8 IN.

8.1.1 PREHEAT ITEMS BEFORE THEIR WELDING, ALLOW PREHEATING TEMPERATURE OF 390°-540°F.

8.1.2 THE INTERPASS WELD TEMPERATURE SHALL NOT BE LESS THAN 390°F.

8.1.3 ON LARGE SIZE ITEMS NOT ALLOWING UNIFORM TEMPERATURE IN ACCORDANCE WITH PARA 8.1.1. HEAT THE WHOLE ASSEMBLY TO MINIMUM 150°F BEFORE WELDING, 6 IN.ON EACH SIDE OF WELDMENT TO 390°-540°F.

8.2 WELDMENT USING AUSTENITIC FILLER METAL:

8.2.1 DO NOT PREHEAT.

8.2.2 KEEP INTERPASS WELD TEMPERATURE AT NO MORE THAN 190°F.

8.2.3 DO NOT PERFORM STRESS RELIEF AFTER WELDING.

9.0 QUALITY ASSURANCE

9.1 CHECK VISUALLY -100%- ALL ROOT PASSES, WELDS AND AREAS AFFECTED BY WELDING HEAT.

9.2 PERFORM DYE PENETRANT INSPECTION ON ALL CLASS II WELDINGS(REFER TO SAMPLING INSPECTION USED IN INSPECTION INSTRUCTION).

9.3 ITEM 13228E5973(TRAVEL LOCK) SHALL BE INSPECTED USING MAGNETIC PARTICLE INSPECTION (AFTER WELDING AND HEAT TREATMENT) PER ASTM E709. NO CRACKS PERMITTED.

10. IN-PROCESS CORRECTIVE ACTION OF REPAIR

DISCONTINUITIES WITHIN THE WELD METAL MAY BE CORRECTED BY THE WELDER BY GRINDING OF THE WELD METAL AND REWELDING USING THE ORIGINAL WELDING PROCEDURE PER AWS D 1.1, PAR 3.7

11. DISCONTINUITY

11.1 CRACKS: NONE IN THE WELD, HEAT-AFFECTED ZONE OR IN ADJACENT BASE METAL.

11.2 OVERLAP: NONE. REMOVE BY GRINDING.

11.3 MISMATCH: NO MORE THAN 30% THICKNESS OF THE THINNER BASE METAL (3), BUT NO MORE THAN 1/8 IN. IN ANY CASE.

11.4 POROSITY: FOR CLASS I WELDS, THE SUM OF DIAMETERS OF VISIBLE PIPING POROSITY IN WELDS DOES NOT EXCEED 3/8 IN. (9.5MM) IN ANY LINEAR INCH OF WELD AND SHALL NOT EXCEED 3/4 IN. (19.0MM) IN ANY 12 IN. (300MM) LENGTH OF WELD. FOR CLASS II WELDS, THE FREQUENCY OF PIPING POROSITY IN FILLET WELDS SHALL NOT EXCEED ONE IN EACH 4 IN. (102MM) OF WELD LENGTH AND THE MAXIMUM DIAMETER SHALL NOT EXCEED 5/32 IN. (2.4MM).

11.5 SLAG INCLUSIONS: NONE. SHALL BE REMOVED BY GRINDING AND REWELDING.

11.6 UNDERCUT: FOR CLASS II WELDS, UNDERCUT SHALL BE NO MORE THAN 0.01 IN. (0.25MM) DEEP WHEN THE WELD IS TRANSVERSE TO TENSILE STRESS UNDER ANY DESIGN LOADING CONDITION. UNDERCUT SHALL BE NO MORE THAN 1/32 IN. (0.8MM) DEEP FOR ALL OTHER CASES.

11.7 FUSION: THOROUGH FUSION BETWEEN BASE METAL AND WELD METAL, AND BETWEEN ADJACENT PASSES OF WELD METAL.

11.8 CRATERS: FILLED TO FULL CROSS-SECTION OF THE WELD, EXCEPT FOR THE ENDS OF INTERMITTENT FILLET WELDS OUTSIDE THEIR EFFECTIVE LENGTH.

11.9 INCOMPLETE PENETRATION.
DEPTH: SMALLER OF 5% T OR .02 IN.
LENGTH: MAXIMUM 10% OF WELD LENGTH.

11.10 SPACING.
MINIMUM 2 T BETWEEN TWO ADJACENT DISCONTINUITIES.

UNLESS OTHERWISE SPECIFIED DIMENSIONS ARE FOR ONE PLACE (.XX) TWO PLACE (.XXX) THREE PLACE (.XXXX) ANGLES — THIRD ANGLE PROJECTION

DO NOT SCALE THIS DRAWING

FOR INTERPRETATION OF AWS DOD-STD-100 APPLIES

REMOVE BURRS AND BREAK SHARP EDGES — SHARP EDGES RADIUS

MATERIAL

DRAWN BY S.TUBILER DATE 06.04.88
CHECKED BY M. SHELL 06.04.88
DESIGN APPROVED DATE 8 MAY 1987
APPROVED FOR PROCUREMENT DATE

U.S. ARMY MOBILITY EQUIPMENT RESEARCH AND DEVELOPMENT COMMAND FORT BELVOIR, VIRGINIA 22060

WELDMENT REQUIREMENTS

SIZE A1 CAGE CODE 07403 NO. 13228E6115
SCALE NONE SHEET 1 OF 1

Appendix I