STATEMENT OF WORK (SOW)

FOR THE REBUILD OF THE

WINCH ATTACHMENT, CATERPILLAR, MODEL 57

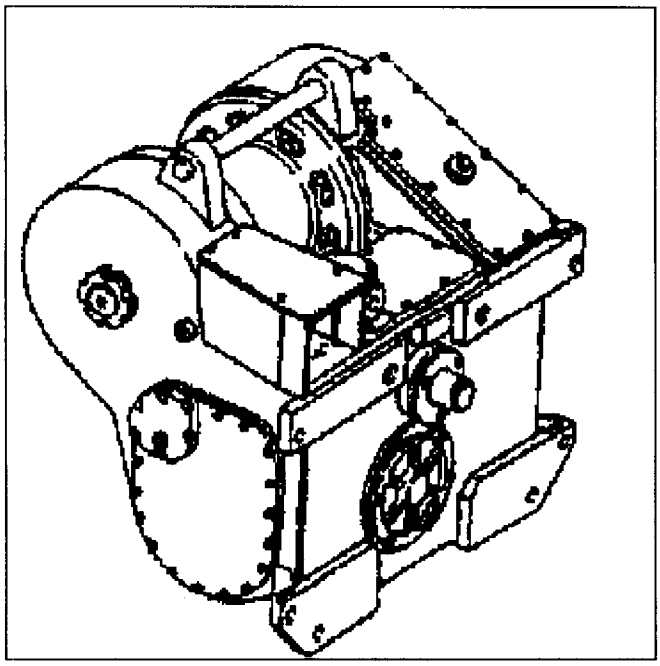

NSN 3830-01-155-1587

TABLE OF CONTENTS

SECTION/PARAGRAPH		PAGE
1.0	SCOPE	1
1.1	Background	1
1.2	Item Identification	1
2.0	APPLICABLE DOCUMENTS	1
2.1	Military Standards	1
2.2	Other Government Documents and Publications	2
2.3	Industry Standards	2
3.0	REQUIREMENTS	3
3.1	General Task	3
3.2	Inspection, Testing and Acceptance	4
3.3	Packaging, Handling, Storage and Transportation (PHS&T)	4
3.4	Configuration Management	5
3.4.1	Configuration Status Accounting (CSA)	5
3.4.2	Configuration Control	5
3.5	Government Furnished Equipment (GFE)/ Government Furnished Materiel (GFM)	5
3.6	Contractor Furnished Materiel(CFM)	5
3.7	Quality Assurance Provisions	5
3.8	Acceptance	6
3.9	Rejection	7
Appendix A	Configuration Checklist	A-1

Statement of Work (SOW) for the Rebuild of the Winch Attachment Caterpillar Model 57 NSN 3830-01-155-1587

1.0 SCOPE. This Statement of Work (SOW) along with the U.S. Marine Corps Rebuild Standard RS-08757A-50 establishes, sets forth tasks and identifies the work efforts that shall be performed by the Contractor (for the purposes of this SOW, Contractor is defined as the commercial or government entity performing the rebuild) to rebuild the Winch Attachment Caterpillar, Model 57, (hereafter referred to as the Winch Assembly), Marine Corps Weapon System Code LD, NSN 3830-01-155-1587. This document contains requirements to restore the Winch Assembly to Condition Code "A". Condition Code "A" is defined as "serviceable/issuable without qualification, new, used, repaired or reconditioned material which is serviceable and issuable to all customers without limitation or restriction including material with more than six months shelf-life remaining".

Questions related to this SOW should be addressed to Marine Corps Systems Command (MCSC), Code PMM152, Bldg 3700, Rm 310W, 814 Radford Blvd., STE 20343, Albany, Georgia 31704-0343, commercial telephone number (229) 639-6983 or DSN 567-6983.

1.1 Background. Rebuild is defined as "That maintenance technique to restore an item to a standard as near as possible to original or new condition in appearance, performance, and life expectancy. This is accomplished through a maintenance technique or complete disassembly of the item, inspection of all parts or components, repair or replacement of worn or unserviceable elements using original manufacturing tolerances and/or specifications and subsequent reassembly of the items".

1.2 Item Identification. The Winch Assembly is an assembly that is made up of seven different subassemblies. These subassemblies are identified in SL-3-06537B and Appendix "A" of this SOW. The control valve and wire rope subassemblies are installed on the winch drum subassembly. All other subassemblies are not installed, but are provided as components of the Winch Assembly. The Winch Assembly is not a self-powered assembly. It must be mounted on a D7G Tractor (NSN 2410-01-155-1588) to function as designed. Mounting the Winch Assembly on the D7G Tractor requires all seven subassemblies.

2.0 APPLICABLE DOCUMENTS. The following documents form a part of this SOW to the extent specified. Unless otherwise specified, the issues of these documents are those listed in the Defense Index of Specifications and Standards (DoDISS) and supplement there to which is in effect on the date of solicitation. In the event of conflict between the documents referenced herein and the contents of this SOW, the content of the SOW shall be the superseding requirement unless otherwise specified.

2.1 Military Standards

MIL-STD-129	DoD Standard Practice: Military Marking for Shipment and Storage

MIL-STD-130	U.S. Military Property, Identification Marking of
MIL-STD-642	DoD Standard Practice for Identification Marking of Combat and Tactical Transport Vehicles
MIL-STD-2073-1D(1)	DoD Standard Practice for Military Packaging

2.2 Other Government Documents and Publications

MCO P11262.2A	Inspection, Testing, and Certification of Tactical Ground Load Lifting Equipment
RS-08757A-50	Rebuild Standard 0857A-50 Tractor, Medium, Full Tracked, Model D7G, NSN 2410-01-155-1588
SL-3-06537B	List of Components for Winch Attachment Caterpillar, Model 57
SL-4-06537B w/chg. 1-2	Repair Parts List for Winch Attachment Caterpillar, Model 57
TM-4750-15/1	Painting and Registration Marking for Marine Corps Combat and Tactical Equipment
DoD 4000.25-1-M	Military Standard Requisitioning and Issue Procedures (MILSTRIP)

Military Handbooks (For Guidance)

MIL-HDBK-61	Configuration Management Guidance

2.3 Industry Standards

ANSI/ISO/ASQC Q9001-2000	Quality Management Systems-Requirements

Industry Standards (For Guidance)

ANSI/EIA-649	National Consensus Standard for Configuration Management

Copies of Military Standards and Specifications are available from the DoD Single Stock Point, Document Automation and Production Service, Building 4/D, 700 Robbins Avenue, Philadelphia, PA 19111-5094, commercial telephone number (215) 697-2179 or DSN 442-2179, or on the Internet at http://www.dodssp.daps.mil. Copies of other government documents and publications required by contractors in connection with specific SOW requirements shall be

obtained through the Contracting Officer: Commander, Attn: Contracts Department (Code 891), P. O. Drawer 43019, 814 Radford Blvd., Marine Corps Logistics Command, Albany, Georgia 31704-3019, commercial telephone number (229) 639-6761 or DSN 567-6761. Copies of engineering drawings, if applicable, shall be obtained from Supply Chain Management Center, Attn: Code 566-1A, 814 Radford Blvd., STE 20320, Albany, Georgia 31704-0320, commercial telephone number (229) 639-6476 or DSN 567-6476.

3.0 REQUIREMENTS

3.1 General Tasks. In fulfilling the specified requirements, the Contractor shall:

a. Perform a complete rebuild of the Winch Assembly in accordance with RS-08757A-50. Winch Assembly parts list is contained within SL-4-06537B w/chg. 1-2.

b. Provide materials, labor, facilities, repair parts, and missing parts necessary to inspect, diagnose, restore, and test the Winch Assembly. Upon completion of the rebuild, the Winch Assembly shall be Condition Code "A".

c. After rebuild is completed, all Winch Assembly hydraulic subassemblies that are open to the atmosphere shall be sealed with dust plugs and caps to prevent foreign material from entering that subassembly.

d. Wire Rope Assembly, NSN 4010-01-259-2713, will be inspected in accordance with Section 2003 of MCO P11262.2A. All wire rope assemblies shall be replaced that do not meet these requirements 100 percent. Wire rope assemblies are not required to be installed on the winch drum.

e. Data Plates and Decals. Each rebuilt Winch Assembly shall have a Rebuild Data Plate affixed next to the existing Winch Data Plate after Winch Assembly has completed the rebuild cycle. The data plate shall meet the requirements of MIL-STD-130 and TM 4750-15/1. The Rebuild Data Plate shall contain the following information:

WINCH ASSEMBLY SERIAL NO._____
REBUILD IN ACCORDANCE WITH SOW-06-PMM152-06537B-1/1
CONTRACTOR FACILITY_____
DATE_____

3.2 Inspection, Testing and Acceptance

a. Inspection, testing and acceptance of the Winch Assembly shall be conducted in accordance with provisions of this SOW, MCO P11262.2A and RS-08757A-50.

b. The Contractor shall be responsible for conducting required tests and shall ensure all necessary personnel are available to complete the Winch Assembly Final Inspection. Acceptance tests shall be held at the Contractor Facility. MCSC, Code PMM152, Albany, Georgia

representative(s) shall be given a minimum of two weeks notice prior to beginning acceptance testing. The test area shall be set up with all safety consideration incorporated (test area clearly defined, limit access. to unauthorized vehicle and foot traffic, etc.).

c. The Contractor shall be responsible for correcting any deficiencies identified during inspection/testing. MCSC, Code PMM152, Albany, Georgia representative(s) may require the Contractor to repeat tests or portions thereof, if the original tests fail to demonstrate compliance with this SOW.

d. Acceptance testing on all Winch Assemblies rebuilt under the provisions of this SOW shall be accomplished in accordance with RS-08757A-50, MCO P11262.2A and provisions of this SOW.

e. Vehicle Markings. Registration numbers and other markings shall be applied in accordance with MIL-STD-642.

f. Instruction Plates. The Winch Assembly shall be equipped with instruction plates suitably located, describing any special or important procedures to be followed in operating and servicing the equipment. Plates shall be of a material which will last and remain legible for the life of the equipment and shall be securely affixed thereto with nonferrous screws, rivets or bolts of not less than 1/8 inch diameter.

Record Jacket: All major equipment or components serial numbers that are replaced during the rebuild are to be identified by the Contractor for entry in the record jacket of the Winch Assembly. Information will list the Winch Assembly serial number, name of equipment/component(s) replaced, serial number of deficiency equipment/component(s), serial number of replacement equipment/component(s), and if the equipment/component(s) is new or rebuilt.

3.3 Packaging,Handling, Storage, and Transportation (PHS&T)

a. The Contractor shall be responsible for preservation and packaging of item(s) being rebuilt under the terms of this SOW. Items scheduled for long-term storage or shipment to overseas destinations shall be in accordance with the Level "A" requirements of MIL-STD-2073-1D(1), Method 10. Items scheduled for immediate use or short-term storage shall be in accordance with Level "B" requirements.

b. Marking for shipment and storage shall be in accordance with MIL-STD-129.

c. The Marine Corps will provide the Contractor with shipping address(es) for delivery of repaired equipment. The Contractor shall be responsible for arranging for shipment of the equipment to the pre-designed site(s). The Marine Corps will be responsible for transportation costs associated with shipping the subject equipment to and from the Contractor.

3.4 Configuration Management

3.4.1 Configuration Status Accounting (CSA). The Contractor shall determine the application status of approved configuration changes by visual inspections to the extent possible. The Contractor shall prepare a checklist for each Winch Assembly to record the inspection findings.

3.4.2 Configuration Control. The Contractor shall apply configuration control procedures to established configuration items. The Contractor shall not implement configuration changes to an item's documented performance or design characteristics without prior written authorization. If it is necessary to temporarily depart from the authorized configuration, the Contractor shall prepare and submit a Request For Deviation (RFD). MIL-HDBK-61 and ANSI/EIA-649 provide guidance for preparing this configuration control document. The Configuration Control Checklist shall be used to determine completeness of the Winch Assembly. The Contractor shall provide one copy per Winch Assembly of the Configuration Control Checklist (Appendix A) to Marine Corps Systems Command (MCSC), Code PMM152, Bldg. 3700, Rm 310W, 814 Radford Blvd., STE 20343, Albany, Georgia 31704-0343, commercial telephone number (229) 639-6983 or DSN 567-6983 upon completion of the rebuild or upon MCSC request.

3.5 Government Furnished Equipment (GFE)/Government Furnished Materiel (GFM). The Management Control Activity (MCA)(Code 581-1B) will coordinate GFE/GFM requests and maintain a central control system on all government owned assets in the Contractor's possession. The MCA will forward a GFE Accountability Agreement to the Contractor for signature on an annual basis to establish a chain of custody and identify property responsibilities for Marine Corps assets. The Contractor is to acknowledge receipt of GFM to the MCA within 15 days of receipt. This can be done by mailing a copy of the DD1348 to Materiel and Distribution Management Department, Management Control Activity (Code 581-1B), 814 Radford Blvd., STE 20320, Albany, Georgia 31704-0320 or faxing a copy to commercial telephone number (229) 639-5498 or DSN 567-5498.

3.6 Contractor Furnished Materiel (CFM). The Contractor may requisition materiel as required in the performance of this SOW through the DoD Supply System. DoD 4000.25-1-M (MILSTRIP) Chapter 11 provides guidance to Contractors on the requisition process. The Contractor's decision to utilize CFM procured from the DoD Supply System shall be based upon cost effectiveness, availability of materiel and the required completion/delivery date.

3.7 Quality Assurance Provisions. The performance of the Contractor and the quality of work delivered, material provided and documents written shall be subject to in-process review and inspection by MCSC, Code PMM152, Albany, Georgia representative(s) during contract performance. Inspection may be accomplished at any work location. Authorized MCSC, Code PMM152, Albany, Georgia representative(s) shall be permitted to observe the work/task accomplishment or to conduct inspections within Contractor's normal working hours. Acceptance tests shall be held in-plant. Inspection by MCSC, Code PMM152, Albany, Georgia representative(s) of all acceptance tests plans, materials and associated lists furnished hereunder does not relieve the Contractor from any responsibility regarding defects or other failures to meet contract requirements which may be disclosed prior to final acceptance. The Contractor shall provide and maintain a Quality System that, as a minimum, adheres to the requirements of ANSI/ISO/ASQC Q9001-2000, Quality Management Systems – Requirements. The Contractor

work shall be subject to in-process reviews and inspections for compliance with Quality Systems by MCSC, Code PMM152, Albany, Georgia representative(s). Noncompliance with procedures resulting in degraded quality of work may result in a stop-work order requiring action by the Contractor to correct the work performed and to enforce compliance with quality assurance procedures or face contract termination. Notwithstanding such, MCSC, Code PMM152, Albany, Georgia representative's inspection, it shall be the Contractor's responsibility to ensure that the entire system meets the performance requirements delineated and addressed in the Winch Assembly and in this SOW. The Contractor will not be subject to government oversight if the Contractor has been ISO-9001 qualified or certified with a 2nd or 3rd party certification. The discovery of non-conforming product or service shall lead to government oversight until the contractor is re-qualified or recertified by 2nd and 3rd party auditing service.

Quality assurance operations performed by the Contractor shall be subject to the MCSC, Code PMM152 representative (s) verification at any time. MCSC, Code PMM152, Albany, Georgia representative(s) verifications can include, but shall not be limited to the following:

a. Inspection of materials, products, assemblies, and documentation to assess compliance with quality standards.

b. Surveillance of operations to determine that quality assurance, practices, methods, and procedures are being properly applied.

c. Inspections of deliverable products to assure compliance with all requirements of the Winch Assembly, this SOW, and applicable documents used herein.

d. Failure of the Contractor to promptly correct deficiencies discovered shall be a reason for suspension of acceptance until corrective action has been made.

3.8 Acceptance. The performance of the Contractor and the quality of work delivered, including all equipment furnished and documentation written or compiled shall be subject to in process review and inspection during performance. Inspection may be accomplished in plant or at any work site or location, and MCSC, Code PMM152, Albany, Georgia representative(s) shall be permitted to observe the work or to conduct inspection during normal Contractor's working hours. Final inspection and acceptance testing shall be conducted at the Contractor Facility. Final acceptance shall be conducted on 100 percent of items to verify that the units meet all requirements

a. Failure of the Contractor to promptly correct deficiencies discovered shall be a reason for suspension of acceptance until corrective action has been made.

3.9 Rejection. Failure to comply with any of the specified requirements listed herein shall be reason for rejection by MCSC, Code PMM152, Albany, Georgia representative(s). The Contractor at no additional cost to the Marine Corps shall provide the following:

a. Develop an approach for modification or correction of all deficiencies.

b. On approval of a documented approach, the Contractor shall correct the deficiencies and repeat verification until acceptable compliance with acceptance test procedures is demonstrated.

CONFIGURATION CHECKLIST

The Winch Assembly, NSN 3830-01-155-1587, is composed of seven different assemblies. These assemblies are identified in SL-3-06537B. The Winch Assembly is palletized or boxed. The Winch Assembly can not be tested if all components are not provided for rebuild.

This Configuration Inspection Checklist is to assure all Winch Assembly components are provided to the Contractor Facility for rebuild.

Item	Characteristic	NSN/Part Number	SL-3 Item No.	Present
1	Mounting Group	2590-01-422-7167	1 thru 8	
2	Drive Assembly	3040-01-254-5578	9	
3	Line Group	5R7287	10 thru 15	
4	Pump, Rotary	4320-01-202-5616	16	
5	Valve, Directional (installed)	4820-01-253-7345	17	
6	Winch, Drum	1P2150	18	
7	Wire Rope Assembly (installed)	4010-01-259-2713	19	

Items numbered 5 and 7 are installed on the Winch Assembly.

Comments:

CONTRACT DATA REQUIREMENTS LIST

(1 Data Item)

Form Approved
OMB No. 0704-0188

The public reporting burden for this collection of information is estimated to average 110 hours per response, including the time for reviewing instructions, searching existing data sources, gathering and maintaining the data needed, and completing and reviewing the collection of information. Send comments regarding this burden estimate or any other aspect of this collection of information, including suggestions for reducing the burden, to Department of Defense, Washington Headquarters Services, Directorate for Information Operations and Reports (0701-0188), 1215 Jefferson Davis Highway, Suite 1204, Arlington, VA 22202-4302. Respondents should be aware that notwithstanding any other provision of law, no person shall be subject to any penalty for failing to comply with a collection of information if it does not display a currently valid OMB control number. Please DO NOT RETURN your form to the above address. Send completed form to the Government Issuing Contracting Officer for the Contract/PR No. listed in Block E.

A. CONTRACT LINE ITEM NO.	B. EXHIBIT	C. CATEGORY: TDP ____ TM ____ OTHER X

D. SYSTEM/ITEM	E. CONTRACT/PR NO.	F. CONTRACTOR
Winch Assembly, Mod 57		

1. DATA ITEM NO.	2. TITLE OF DATA ITEM	3. SUBTITLE
A001	Request For Deviation	Configuration Management

4. AUTHORITY *(Data Acquisition Document No.)*	5. CONTRACT REFERENCE	6. REQUIRING OFFICE
DI-CMAN-80640C	SOW 3.4.2	MCLCA (566)

7. DD 250 REQ	9. DIST STATEMENT REQUIRED	10. FREQUENCY	12. DATE OF FIRST SUBMISSION
LT		ASREQ	See Blk 16

8. APP CODE	11. AS OF DATE	13. DATE OF SUBSEQUENT SUBMISSION
A	A	

17. PRICE GROUP

18. ESTIMATED TOTAL PRICE

16. REMARKS

Blk 4 - RFDs shall be submitted electronically and contractor format is authorized.

Block 4. RFD text files shall be created using MICROSOFT (.doc) or ADOBE (.pdf) formated software products

Block 4. RFD accompanying figures or graphics shall be created using MICROSOFT or ADOBE formatted with a minimum density of 600 dpi.

Blks 10 & 12 - RFDs shall be submitted to obtain authorization to deliver nonconforming material which does not meet prescribed configuration documentation.

RFD submission/notification shall be sent to:
smblogcomconfigmngmnt@logcom.usmc.mil

Distribution Statement A: Approved for Public Release; Distribution is Unlimited.

14. DISTRIBUTION

a. ADDRESSEE	b. COPIES Draft	Final Reg	Final Repro
MCLCA (566-1)	0	1	0
15. TOTAL →	0	1	0

G. PREPARED BY	H. DATE	I. APPROVED BY	J. DATE
Pat Taylor HJ Colb Pettis	9-30-03	[signature]	10-1-03

DD FORM 1423-1, AUG 96 (EG) PREVIOUS EDITION MAY BE USED.

Designed using Perform Pro, WHS/DIOR, Aug 96